Outperform every day.™

Project:

Item Number:

Quantity:

BAR SINKS

1554-C

173-4-2

K1734-C

1551

Bar Sinks

ITEMS

155-4	**2-Hole Sink**
1554-C	**2-Hole Sink with Strainer**
K1554-C	**2-Hole Sink with Strainer and Gooseneck Faucet**
173-4-2	**2-Hole Sink**
1734-C	**2-Hole Sink with Strainer**
K1734-C	**2-Hole Sink with Strainer and Gooseneck Faucet**
1551	**1-Hole Sink for use with Electronic Mixing Faucet (not included)**

FEATURES

- Faucet deck
- Heavy-weight 20 gauge
- Type 304 stainless steel
- Self-rimming
- Satin finish bowl with brushed finished flange
- One-piece drawn bowl
- Stud mounting with mounting brackets included
- Positive drain - 3½ "
- Optional gooseneck faucet has a full brass body, is AB1953 lead free compliant, and has a 2.2 GPM flow rating
- Two holes on 4 inch centers, except 1551
- Single hole on 1551 to accommodate electronic faucet, not included

DESCRIPTION

Vollrath Bar Sinks are designed and built to withstand vigorous use in professional and commercial kitchens.

ACCESSORIES (NOT NSF OR CSA)

- ❑ 2612 - Gooseneck faucet, 4" (10.2) centers, 7½" (19.1) high
- ❑ 2005 - Repair kit for 2612 faucet
- ❑ 2615W - Wrist action handles
- ❑ 7400 - Strainer for 3½" (8.9) drains

Agency Certifications

NSF — Sink bowl and faucets

CSA — 155-4 and 173-4-2

1551
155-4 and 173-4-2 sinks

WARRANTY: All models shown come with Vollrath's standard warranty against defects in materials and workmanship. For full warranty details, please refer to www.Vollrath.com.

Approvals	Date

Due to continued product improvement, please consult www.vollrath.com for current product specifications.

Outperform every day.™
www.vollrath.com

The Vollrath Company, L.L.C.
1236 North 18th Street
Sheboygan, WI 53081-3201 U.S.A.
Customer Service: 800.628.0830
Canada Customer Service: 800.695.8560
Main Fax: 800.752.5620 or 920.459.6573

Technical Services: 800.628.0832
Technical Services Fax: 920.459.5462

BAR SINKS

DIMENSIONS (inches (cm))

155-4 / 1554-C / K1554-C

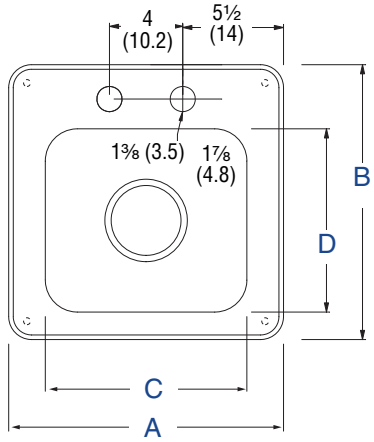

Top View

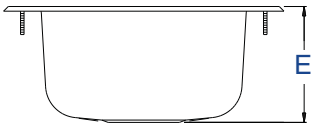

Front View

173-4-2 / 1734-C / K1734-C

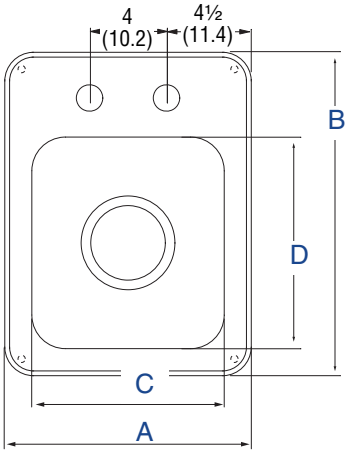

Top View

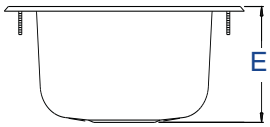

Front View

1551

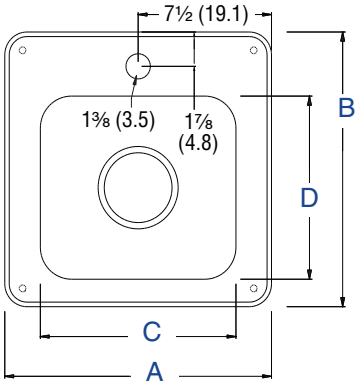

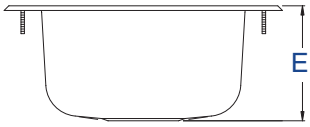

Front View

SPECIFICATIONS

Item No.	Description	Overall Dimension (A x B)	Bowl Dimension (C x D)	Bowl Depth (E)	Drain Diameter	Gauge	Number of Mounting Studs	Case Lot	Case Weight LB (KG)
155-4	2-Hole Sink	15 x 15 (38.1 x 38.1)	11 x 10 (28 x 25.4)	6³⁄₁₆ (15.7)	3½ (3.9)	20	4	1	5 (2.3)
1554-C	2-Hole Sink with Strainer								6 (2.7)
K1554-C	2-Hole Sink with Strainer and Goose-neck Faucet								7.4 (3.4)
173-4-2	2-Hole Sink	13 x 17 (33 x 43.2)	10 x 11 (25.4 x 28)						4.6 (2.1)
1734-C	2-Hole Sink with Strainer								5.6 (2.5)
K1734-C	2-Hole Sink with Strainer and Goose-neck Faucet								7 (3.2)
1551	1-Hole Sink for use with Electronic Mixing Faucet	15 x 15 (38.1 x 38.1)	11 x 10 (28 x 25.4)						5 (2.3)

Mounting

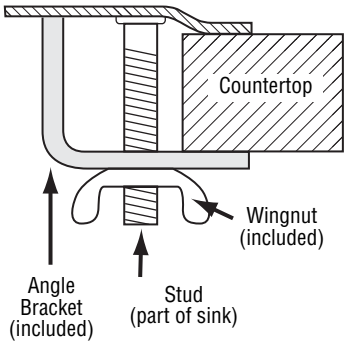

The Vollrath Company, L.L.C.
1236 North 18th Street
Sheboygan, WI 53081-3201 U.S.A.
Customer Service: 800.628.0830
Canada Customer Service: 800.695.8560
Main Fax: 800.752.5620 or 920.459.6573

Technical Services: 800.628.0832
Technical Services Fax: 920.459.5462

Outperform every day.™

www.vollrath.com

© 2014 The Vollrath Company L.L.C.

Form Number L35946 9/24/14
Printed in USA