STAINLESS STEEL

DISHTABLES
SOIL STRAIGHT

NEW *Tile Edge Design*

Item #: _____ *Qty #:* _____

Model #: _____

Project #: _____

SPEC-LINE
DTS-S30-60L Shown

10-1/2" EXTRA LARGE Bold Looking Backsplash with 2" return and tile edge

Spec-Line: 14 ga. 304 Series Stainless Steel Top.
16 ga. 304 Stainless Steel Legs Stainless Steel Legs with Welded Cross Bracing & Stainless Steel Bullet Feet.

UPGRADED! Standard: 16 ga. 304 Series Stainless Steel Top.
16 ga. 304 Stainless Steel Legs Stainless Steel Legs with Welded Cross Bracing & Stainless Steel Bullet Feet.

Super Saver: 16 ga. 304 Series Stainless Steel Top.
Galvanized Legs with Plastic Bullet Feet.

ACCESSORIES	Model #	Qty
Faucet		
Wall Shelf		
Undershelf		

FEATURES:

Tile edge for ease of installation.

STANDARD & SUPERSAVER SOIL section features 5" deep sink bowl.

SPEC-LINE SOIL section features 8" deep sink bowl.

Dishtable system consists of SOIL and CLEAN sections.
Table is furnished with 10-1/2" splash with a 2" return.

CONSTRUCTION:

All TIG welded.

Welded areas blended to match adjacent surfaces and to a satin finish.

Stainless Steel Gussets welded to a stainless steel support channel.

MECHANICAL:

Faucet holes in SPLASH punched on 8" centers, faucet not included.

Waste drain is 1 1/2" IPS basket type and is included.

Nominal sizing on all dishtables for ease of installation.

		14 Gauge 304 TOP 16 Ga. Stainless Steel Legs	16 Gauge 304 TOP Stainless Steel Legs	16 Gauge 304 TOP Galvanized Legs	
Nominal Size	**"L"**	**SPEC-LINE**	**STANDARD**	**SUPER SAVER**	**Approx. Wt.**
3 Ft.	35"	**DTS-S30-36L or R**	**DTS-S70-36L or R**	**DTS-S60-36L or R**	70 lbs.
4 Ft.	47"	**DTS-S30-48L or R**	**DTS-S70-48L or R**	**DTS-S60-48L or R**	85 lbs.
5 Ft.	59"	**DTS-S30-60L or R**	**DTS-S70-60L or R**	**DTS-S60-60L or R**	100 lbs.
6 Ft.	71"	**DTS-S30-72L or R**	**DTS-S70-72L or R**	**DTS-S60-72L or R**	115 lbs.
7 Ft.	83"	**DTS-S30-84L or R**	**DTS-S70-84L or R**	**DTS-S60-84L or R**	125 lbs.
8 Ft.	95"	**DTS-S30-96L or R**	**DTS-S70-96L or R**	**DTS-S60-96L or R**	135 lbs.
9 Ft.	107"	**DTS-S30-108L or R**	**DTS-S70-108L or R**	**DTS-S60-108L or R**	235 lbs.
10 Ft.	119"	**DTS-S30-120L or R**	**DTS-S70-120L or R**	**DTS-S60-120L or R**	290 lbs.
12 Ft.	143"	**DTS-S30-144L or R**	**DTS-S70-144L or R**	**DTS-S60-144L or R**	300 lbs.

Customer Service Available To Assist You 1-800-645-3166 8:30 am - 8:00 pm E.S.T.
Email Orders To: customer@advancetabco.com. For Smart Fabrication™ Quotes, Email To: smartfab@advancetabco.com or Fax To: 631-586-2933

www.advancetabco.com

NEW YORK Fax: (631) 242-6900
GEORGIA Fax: (770) 775-5625
TEXAS Fax: (972) 932-4795
NEVADA Fax: (775) 972-1578

DIMENSIONS and SPECIFICATIONS

TOL ± .500”

ALL DIMENSIONS ARE TYPICAL

SEE DISH MACHINE COMPATIBILITY CHART TO ENSURE PROPER FIT

Dish Machine Compatibility Chart can be found on our website at www.advancetabco.com under “Product Support”

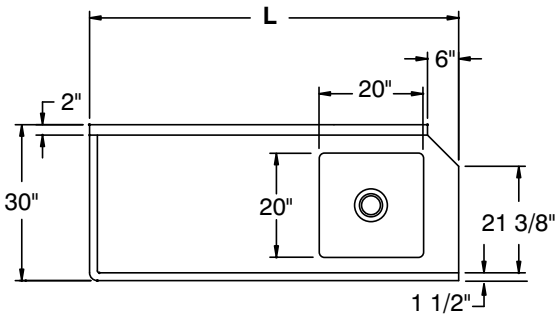

STRAIGHT SOIL LEFT

DISH MACHINE

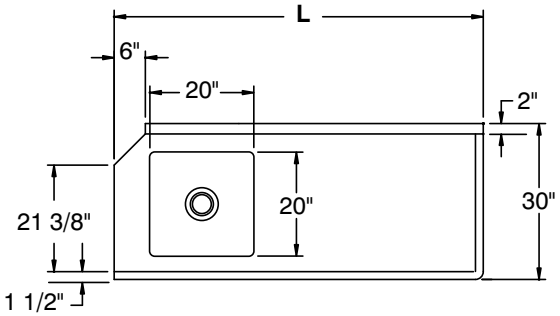

STRAIGHT SOIL RIGHT

OPERATOR

SPEC-LINE	STANDARD & SUPER SAVER
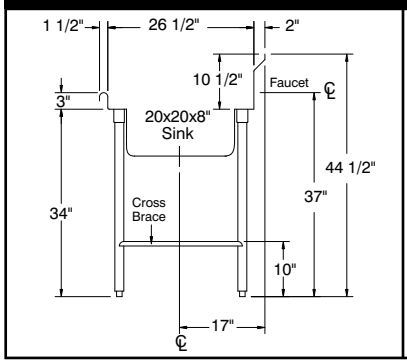	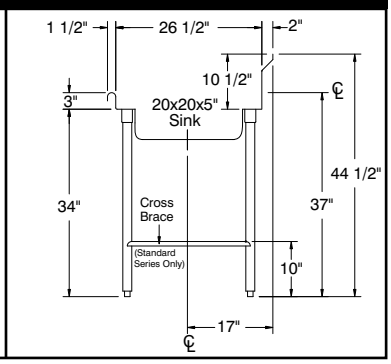

CUSTOMIZE YOUR OWN SYSTEM
by Ordering Optional Accessories from our
PRODUCT & PRICE GUIDE

Splash Detail

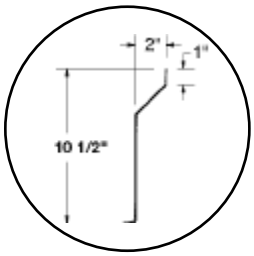

Description	SPEC-LINE	STANDARD	SUPER SAVER
Material	**14 Ga. 304 Series**	**16 Ga. 304 Series**	**16 Ga. 304 Series**
1 5/8” Dia. Legs	Stainless Steel	Stainless Steel	Galvanized
Gussets	Stainless Steel	Stainless Steel	Stainless Steel
Bullet Feet (1” adj.)	Stainless Steel	Stainless Steel	Plastic
Cross Bracing	Welded	Welded	Optional
Prerinse Bowl Depth	8”	5”	5”
Prerinse Basket	Included	Optional	Optional

ADVANCE TABCO®
SMART FABRICATION™

200 Heartland Boulevard, Edgewood, NY 11717-8380

ADVANCE TABCO is constantly engaged in a program of improving our products. Therefore, we reserve the right to change specifications without prior notice.

© ADVANCE TABCO, DECEMBER 2009