ADVANCE TABCO
SMART FABRICATION™

STAINLESS STEEL

FABRICATED ECONOMY SINKS

NSF

Three & Four Compartments

Item #: _____ Qty #: _____
Model #: _____
Project #: _____

Rolled Rim Edge For Additional Strength

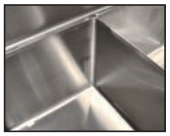

Fabricated Bowls are Welded Together at the Seams

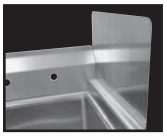

K-700
Removable
Side Splashes
Fits Left OR Right Side

FEATURES:

Backsplash has tile edge for ease of installation.

Sink bowls are 3/4" coved corner and meet NSF requirements.

Rolled Rim Edge for additional strength.

Sink Bowls are 14" deep for greater capacity.

CONSTRUCTION:

All TIG welded.

Welded areas blended to match adjacent surfaces and to a satin finish.

Gussets welded to a die-formed reinforced plate.

MATERIAL:

1 5/8" diameter stainless steel legs with 1" adjustable stainless steel bullet feet.

Entire unit is 16 gauge 304 stainless steel.

Gussets - stainless steel.

MECHANICAL:

- Supply is 1/2" IPS hot & cold.
- Faucet holes on 8" centers.
- Faucets are not included **(see accessories)**.
- Waste drains are 1 1/2" IPS S/S basket type, located in center of sink bowl, and are included.

	MODEL #	Length L	Width W	Bowl Size A & B	Drbd. Length C	# of Drbds.	Drbd. Location	Wt.
3 COMPARTMENT	FC-3-1515	50"	20 1/2"	15" x 15"	N/A	0	None	110 lbs.
	FC-3-1515-15RorL	62 1/2"	20 1/2"		15"	1	Specify	120 lbs.
	FC-3-1515-15RL	75"	20 1/2"		15"	2	R & L	120 lbs.
	FC-3-1620	53"	26"	16" x 20"	N/A	0	None	120 lbs.
	FC-3-1620-18RorL	68 1/2"	26"		18"	1	Specify	135 lbs.
	FC-3-1620-18RL	84"	26"		18"	2	R & L	150 lbs.
	FC-3-1620-24RL	96"	26"		24"	2	R & L	205 lbs.
	FC-3-1620-36RL	120"	26"		36"	2	R & L	240 lbs.
	FC-3-1818	59"	24"	18" x 18"	N/A	0	None	120 lbs.
	FC-3-1818-18RorL	74 1/2"	24"		18"	1	Specify	128 lbs.
	FC-3-1818-24RorL	80 1/2"	24"		24"	1	Specify	136 lbs.
	FC-3-1818-18RL	90"	24"		18"	2	R & L	140 lbs.
	FC-3-1818-24RL	102"	24"		24"	2	R & L	150 lbs.
	FC-3-1824	59"	30"	18" x 24"	N/A	0	None	135 lbs.
	FC-3-1824-18RorL	74 1/2"	30"		18"	1	Specify	142 lbs.
	FC-3-1824-24RorL	80 1/2"	30"		24"	1	Specify	150 lbs.
	FC-3-1824-18RL	90"	30"		18"	2	R & L	265 lbs.
	FC-3-1824-24RL	102"	30"		24"	2	R & L	300 lbs.
	FC-3-2028-24RL	108"	34"	20" x 28"	24"	2	R & L	315 lbs.
	FC-3-2030-20RL	100"	36"	20" x 30"	20"	2	R & L	315 lbs.
	FC-3-2030-30RL	120"	36"		30"	2	R & L	370 lbs.
	† FC-3-2424	77"	30"	24" x 24"	N/A	0	None	175.lbs.
	† FC-3-2424-18RorL	92.5	30"		18"	1	Specify	310 lbs.
	† FC-3-2424-18RL	108"	30"		18"	2	R&L	330 lbs.
	† FC-3-2424-24RorL	98 1/2"	30"		24"	1	Specify	330 lbs.
	† FC-3-2424-24RL	120"	30"		24"	2	R & L	350 lbs.
	† FC-3-2430	77"	36"	24" x 30"	N/A	0	None	200 lbs.
	† FC-3-2430-24RorL	99"	36"		24"	1	Specify	375 lbs.
	† FC-3-2430-24RL	120"	36"		24"	2	R & L	400 lbs.
	† FC-3-2430-30RorL	105"	36"		30"	1	Specify	425 lbs.
	† FC-3-2430-30RL	132"	36"		30"	2	R & L	445 lbs.
	† FC-3-2430-36RorL	111"	36"		36"	1	Specify	450 lbs.
	† FC-3-2430-36RL	144"	36"		36"	2	R & L	490 lbs.
	† FC-3-3024	95"	30"	30" x 24"	N/A	0	None	200 lbs.
	† FC-3-3024-24RorL	117"	30"		24"	1	Specify	375 lbs.
	† FC-3-3024-24RL	138"	30"		24"	2	R & L	400 lbs.
	† FC-3-3024-30RorL	123"	30"		30"	1	Specify	425 lbs.
	† FC-3-3024-30RL	150"	30"		30"	2	R & L	445 lbs.
	† FC-3-3024-36RorL	129"	30"		36"	1	Specify	450 lbs.
	† FC-3-3024-36RL	162"	30"		36"	2	R & L	490 lbs.
	† FC-3-3030	95"	36"	30" x 30"	N/A	0	None	240 lbs.
	† FC-3-3030-24RL	138"	36"		24"	2	R & L	470 lbs.
	† FC-3-3030-30RL	150"	36"		30"	2	R & L	515 lbs.
	† FC-3-3030-36RL	162"	36"		36"	2	R & L	560 lbs.
4 COMP.	† FC-4-1818-18RL	108"	24"	18" x 18"	18"	2	R & L	270 lbs.
	† FC-4-1824-18RL	108"	30"	18" x 24"	18"	2	R & L	325 lbs.
	† FC-4-2424-24RL	144"	30"	24" x 24"	24"	2	R & L	355 lbs.

† Requires Two Sets of Faucets

ADVANCE TABCO
SMART FABRICATION™
www.advancetabco.com

Customer Service Available To Assist You 1-800-645-3166 8:30 am - 8:00 pm E.S.T.

For Orders & Customer Service:
Email: customer@advancetabco.com or **Fax:** 631-242-6900

For Smart Fabrication™ Quotes:
Email: smartfab@advancetabco.com or **Fax:** 631-586-2933

DIMENSIONS and SPECIFICATIONS

TOL Overall: ± .500”
Interior: ± .250”

ALL DIMENSIONS ARE TYPICAL

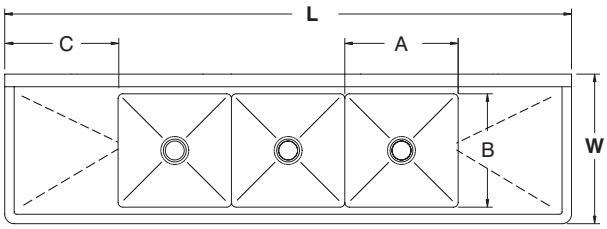

3 COMP - 2 DRBD

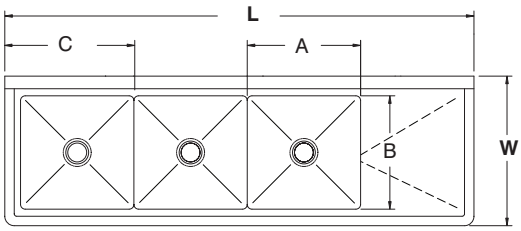

3 COMP - 1 DRBD

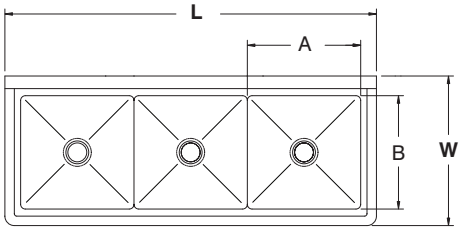

3 COMP

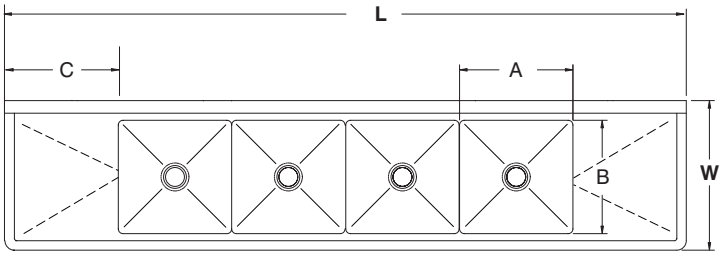

4 COMP - 2 DRBD

ACCESSORIES	Model #	Qty
DRAINS		
FAUCETS		

PLUMBING ROUGH-IN

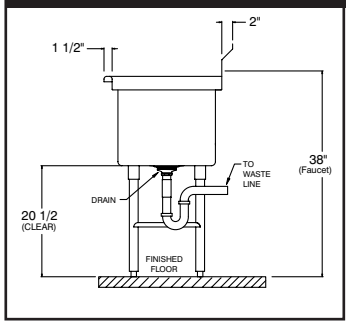

SECTION

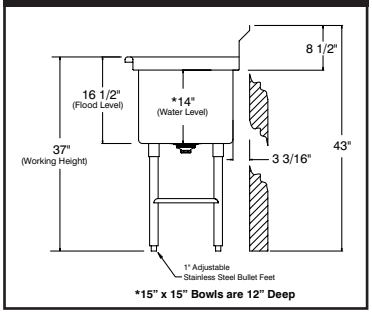

ADVANCE TABCO
SMART FABRICATION™

ADVANCE TABCO is constantly engaged in a program of improving our products. Therefore, we reserve the right to change specifications without prior notice.

200 Heartland Boulevard, Edgewood, NY 11717-8380

© ADVANCE TABCO, FEBRUARY 2018