SPLASH MOUNTED FAUCETS

12" Swing Spout

K-1

14" Swing Spout

K-11

3-1/2" Gooseneck

K-59

HEAVY DUTY Gooseneck

K-69

8" Swing Spout

K-101

HEAVY DUTY 14" Swing Spout

K-105

HEAVY DUTY 14" Swing Spout (T&S)

K-111

HEAVY DUTY 12" Swing Spout (T&S)

K-112

HEAVY DUTY Pre-Rinse Faucet (T&S)

K-116

K-114
Replacement Spray Head & Handle

12" Swing Spout Add-A-Faucet

K-117

16" Swing Spout

K-119

Splash Mount Swivel Gooseneck

K-121

6" Extended Spout

K-123

Eye Wash Attachment

K-170

AC/DC powered Hands-Free Gooseneck

AC & Battery Operated!

K-175

HEAVY DUTY Extra Long Faucet

K-211

Service Faucet

K-240

Wrist handle Gooseneck

K-316

Wrist Handles Only

K-316-LU

Hands-Free Wand

K-400

HEAVY DUTY Pre-Rinse Faucet

DTA-53

K-114
Replacement Spray Head & Handle

Repair Kit For K-1, K-11, K-101, K-112, K-119 & K-211

Repair Kit can only be used on faucets purchased after 12/03

K-00

Faucet Wall Mounting Bracket

K-30

Faucet Mounting Kit K-1, K-11, K-101, K-105, K-112, K-119 & K-211

K-06

ADVANCE TABCO
SMART FABRICATION™
www.advancetabco.com

Customer Service Available To Assist You 1-800-645-3166 8:30 am - 8:00 pm E.S.T.

Email Orders To: customer@advancetabco.com. For Smart Fabrication™ Quotes, Email To: smartfab@advancetabco.com or Fax To: 631-586-2933

NEW YORK	GEORGIA	TEXAS	NEVADA
Fax: (631) 242-6900	Fax: (770) 775-5625	Fax: (972) 932-4795	Fax: (775) 972-1578

DIMENSIONS and SPECIFICATIONS

TOL ± .125”

ALL DIMENSIONS ARE TYPICAL

SPLASH MOUNTED FAUCETS

Swing Spout Faucet

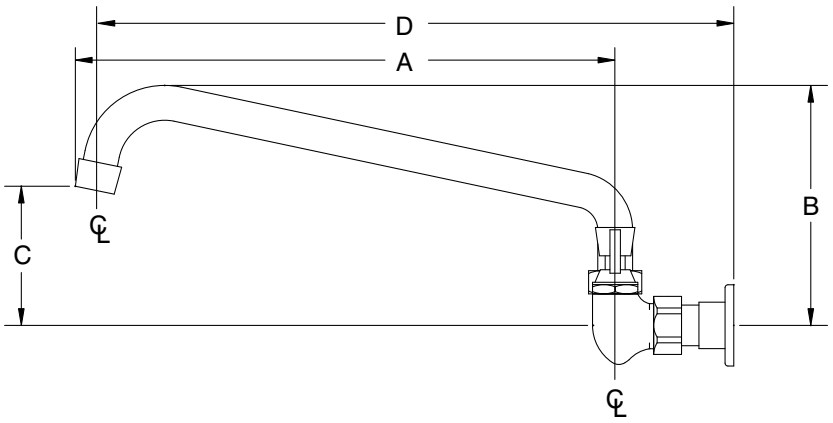

Gooseneck Faucet

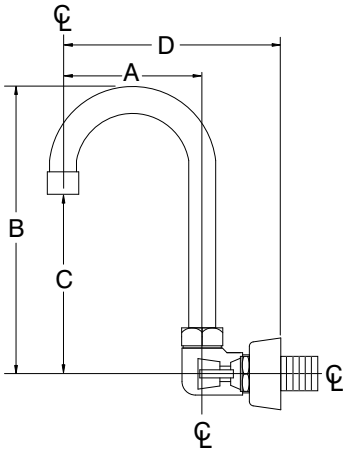

ALL FAUCET AERATORS CONFORM TO ASTM.A112.18.1M
2.0 GPM/7.56 LPM
THREAD: 55/64 - 27 FEMALE

K-240 SERVICE FAUCET
9.6 GPM/36.3 LPM
3/4” HOSE END SPOUT

K-170 - Eye Wash Detail

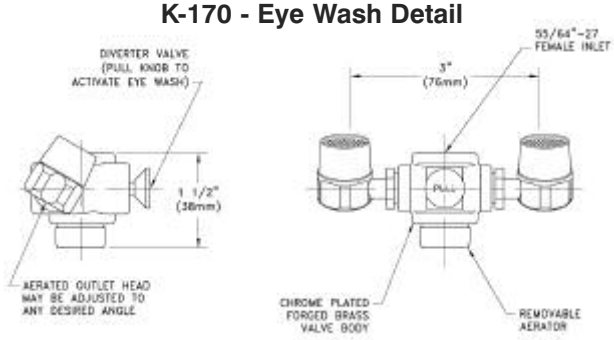

MODEL #	Description	A LENGTH	B HEIGHT	C	D	On Center Dimensions
K-00	Repair Kit For K-1, K-11, K-101, K-119 & 211	N/A	N/A	N/A	N/A	N/A
K-06	Faucet Mt. Kit for K-1, K-11, K-101, K-119 & K-211	N/A	N/A	N/A	N/A	N/A
K-1	12” Swing Spout Faucet	12”	5”	2 1/2”	14”	8” O.C.
K-11	14” Swing Spout Faucet	14”	5 1/2”	3”	16”	8” O.C.
K-59	3 1/2” Gooseneck Faucet	3 1/2”	8”	5”	6”	4” O.C.
K-69	Heavy Duty Gooseneck Faucet	3”	5”	2 3/4”	5 1/2”	4” O.C.
K-101	8” Swing Spout Faucet	8”	4 1/4”	2 1/4”	10”	8” O.C.
K-105	Heavy Duty 14” Swing Spout Faucet	14”	5”	3”	16”	8” O.C.
K-111	Heavy Duty 14” Swing Spout (T&S) Faucet	14”	8 1/4”	5 1/2”	16 1/2”	8” O.C.
K-112	Heavy Duty 12” Swing Spout Faucet	12”	5”	3”	14”	8” O.C.
K-116	Heavy Duty Pre-Rinse (T&S) Faucet	15”	34”	5”	34”	8” O.C.
K-117	Add-A-Faucet with 12” Spout Faucet	12”	N/A	N/A	N/A	N/A
K-119	16” Swing Spout Faucet	18”	16”	4”	18 1/2”	8” O.C.
K-121	Splash Mount Swivel Gooseneck Faucet	3 1/2”	8”	5 1/2”	5 3/4”	Single Hole
K-123	6” Extended Spout Faucet	6”	5”	2 1/2”	8”	4” O.C.
K-170	Eye Wash Attachment (See Above Detail)	N/A	N/A	N/A	N/A	N/A
K-175	Hands Free AC/DC Operated Faucet 6' Cord. INPUT: 100-240VAC 47-6Hz. < 1 Amp Draw. UL LISTED	4 1/2”	7”	3 3/4”	5 1/2”	Single Hole
K-211	Heavy Duty Extra Long Spout Faucet	18”	7 3/4”	5”	21”	8” O.C.
K-240	Service Faucet	6 1/2”	2 1/2”	1 3/8”	9”	8” O.C.
K-316	Wrist Handle Gooseneck Faucet	3 1/2”	8”	5”	6”	4” O.C.
K-400	Hands Free Wand	N/A	N/A	N/A	N/A	N/A
DTA-53	Heavy Duty Pre-Rinse Faucet	15”	34”	5”	34”	8” O.C.

N/A = Not Applicable To Faucet

ADVANCE TABCO
SMART FABRICATION™

ADVANCE TABCO is constantly engaged in a program of improving our products. Therefore, we reserve the right to change specifications without prior notice.

200 Heartland Boulevard, Edgewood, NY 11717-8380

© ADVANCE TABCO, JULY 2009

KaTom Restaurant Supply, Inc.