ADVANCE TABCO®
SMART FABRICATION™

STAINLESS STEEL

HEAVY DUTY WORK TABLES

Open Base

Item #: _____ Qty #: _____
Model #: _____
Project #: _____

FLAT TOP
TMSLAG-X Series

5" BACKSPLASH
TKMSLAG-X Series

MADE IN THE USA

NSF®

FEATURES:

TMSLAG: Top is furnished with 1 5/8" square bend on sides and 1 5/8" sanitary rolled rim on front and rear & square sides.

TKMSLAG: Top is furnished with 1 5/8" square bend on sides and 1 5/8" sanitary rolled rim on front with 5" Rear Splash.

Two hat-channels stud welded under tabletop to reinforce and maintain a level work surface.

CONSTRUCTION:

All TIG welded. Exposed weld areas polished to match adjacent surface.

Top is sound deadened.

Roll formed embossed galvanized hat channels are secured to top by means of structural adhesive and weld studs.

Gussets welded to support hat channels.

MATERIAL:

TOP: 16 gauge stainless steel type "304" series.
LEGS: 1 5/8" diameter tubular Stainless steel. Stainless steel gussets. 1" adjustable stainless steel bullet feet.

	L	Model #	WT.	Cu. Ft.	Model #	WT.	Cu. Ft.
		FLAT TOP			**5" SPLASH**		
24" WIDE	24"	TMSLAG-242-X	36 lbs.	4	TKMSLAG-242-X	41 lbs.	6
	30"	TMSLAG-240-X	42 lbs.	4	TKMSLAG-240-X	47 lbs.	6
	36"	TMSLAG-243-X	47 lbs.	4	TKMSLAG-243-X	52 lbs.	6
	48"	TMSLAG-244-X	56 lbs.	5	TKMSLAG-244-X	62 lbs.	8
	60"	TMSLAG-245-X	64 lbs.	7	TKMSLAG-245-X	73 lbs.	10
	72"	TMSLAG-246-X	77 lbs.	8	TKMSLAG-246-X	84 lbs.	12
	84"	TMSLAG-247-X	86 lbs.	9	TKMSLAG-247-X	95 lbs.	14
	96"	TMSLAG-248-X*	102 lbs.	10	TKMSLAG-248-X*	112 lbs.	16
30" WIDE	24"	TMSLAG-302-X	43 lbs.	5	TKMSLAG-302-X	47 lbs.	8
	30"	TMSLAG-300-X	53 lbs.	5	TKMSLAG-300-X	55 lbs.	8
	36"	TMSLAG-303-X	57 lbs.	5	TKMSLAG-303-X	62 lbs.	8
	48"	TMSLAG-304-X	69 lbs.	6	TKMSLAG-304-X	75 lbs.	10
	60"	TMSLAG-305-X	82 lbs.	8	TKMSLAG-305-X	89 lbs.	13
	72"	TMSLAG-306-X	94 lbs.	10	TKMSLAG-306-X	101 lbs.	15
	84"	TMSLAG-307-X	107 lbs.	11	TKMSLAG-307-X	115 lbs.	18
	96"	TMSLAG-308-X*	126 lbs.	13	TKMSLAG-308-X*	136 lbs.	20
36" WIDE	36"	TMSLAG-363-X	60 lbs.	6	TKMSLAG-363-X	64 lbs.	9
	48"	TMSLAG-364-X	74 lbs.	8	TKMSLAG-364-X	79 lbs.	12
	60"	TMSLAG-365-X	83 lbs.	10	TKMSLAG-365-X	94 lbs.	15
	72"	TMSLAG-366-X	101 lbs.	11	TKMSLAG-366-X	108 lbs.	18
	96"	TMSLAG-368-X*	136 lbs.	15	TKMSLAG-368-X*	148 lbs.	24

*All 8 ft. Tables Provided With 6 Legs

Stainless Steel Bullet Feet are standard on TMSLAG & TKMSLAG Series

ADVANCE TABCO®
SMART FABRICATION™
www.advancetabco.com

Customer Service Available To Assist You 1-800-645-3166 8:30 am - 8:00 pm E.S.T.

For Orders & Customer Service:
Email: customer@advancetabco.com or **Fax:** 631-242-6900

For Smart Fabrication™ Quotes:
Email: smartfab@advancetabco.com or **Fax:** 631-586-2933

DETAILS and SPECIFICATIONS

TOL ± .500”

ALL DIMENSIONS ARE TYPICAL

TMSLAG-X SERIES

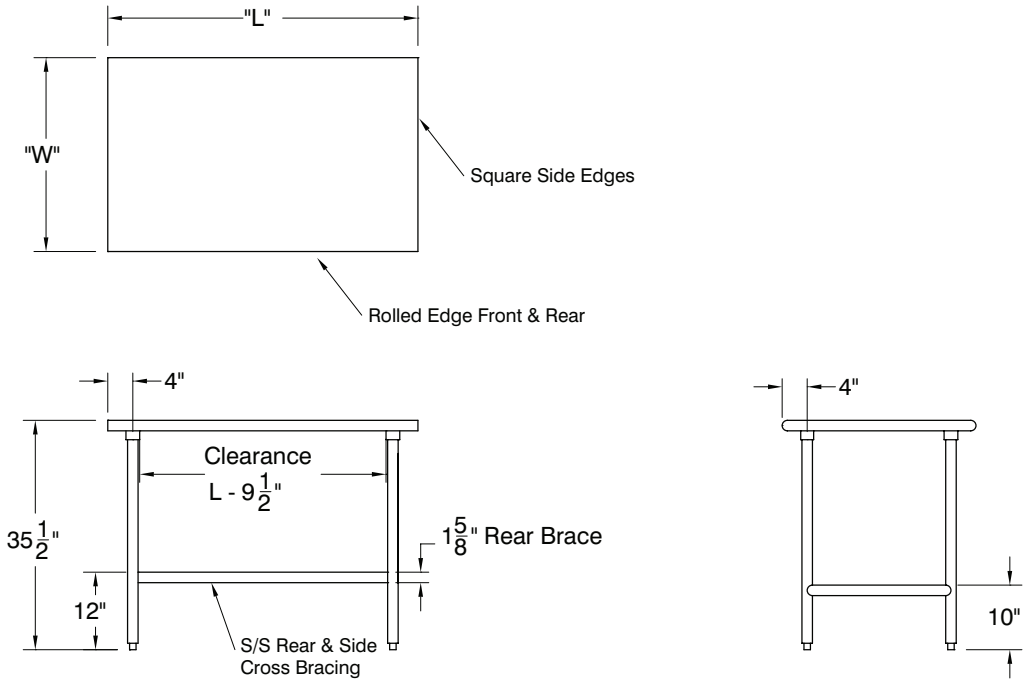

TKMSLAG-X SERIES

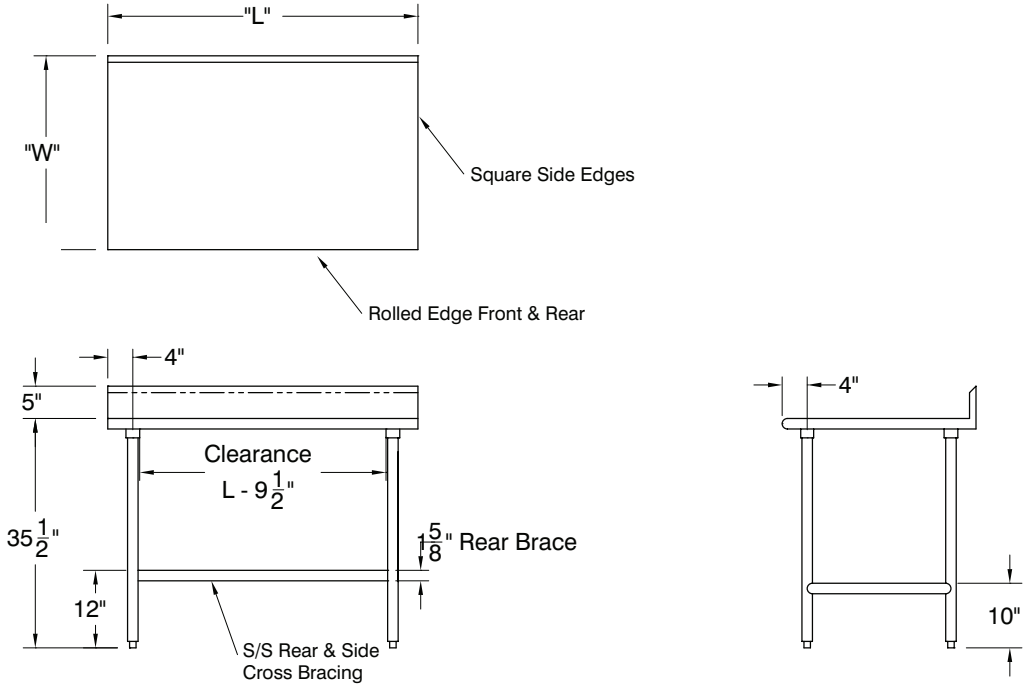

ADVANCE TABCO
SMART FABRICATION™

REF-O 200 Heartland Boulevard, Edgewood, NY 11717-8380

ADVANCE TABCO is constantly engaged in a program of improving our products. Therefore, we reserve the right to change specifications without prior notice.

© ADVANCE TABCO, MAY 2016