Job _____ Item No. _____

Star-Max® Gas Fryers

☐615FF ☐630FF

DESCRIPTION

Star-Max® underfired gas countertop fryers are a perfect addition to your foodservice operation. 15 & 30lb oil capacity options. Easy to operate and clean, Star-Max fryer delivers maximum performance year after year.

SPECIFICATIONS

Fryers are constructed of heavy gauge polished stainless steel. The nickel plated steel kettle features a copper plated bottom and 1/4 turn drain valve. All fryers are equipped with side hanging twin baskets. Fryers are equipped with an adjustable gas thermostat from 200° to 375°, safety valve, pilot control, and high limit safety thermostat. Nickel plated 4" legs with a 1-3/8" adjustment are standard. Available in natural or propane gas. These units are NSF and CSA certified

WARRANTY

These units come with a two [2] year warranty for parts and labor.

FEATURES

- High performance 15-lb or 30-lb capacity single-pot nickel plated steel kettle with convenient front access drain valve
- High power burners for fast recovery and maximum performance. Specify Natural Gas or Propane service
- High performance in-shot burner design with copper plated kettle fins for even heat distribution and optimal heat transfer
- Snap action thermostat ranges from 200°F to 375°F and provides quick response to temperature change
- Automatic pilot light for quick and easy ignition
- Two chrome plated steel mesh side hanging baskets are standard

OPTIONS & ACCESSORIES

- Twin Basket (Left Hand) - 530TBL
- Twin Basket (Right Hand) - 530TBR
- Full Basket (Left Hand) - 216FBL
- Full Basket (Right Hand) - 216FBR

CERTIFICATIONS

MADE IN THE USA

STAR MANUFACTURING INTERNATIONAL INC.
10 Sunnen Drive • Saint Louis, Missouri 63143
Telephone 800 264 7827 • Fax 314 781 5445
www.star-mfg.com

Printed in the U.S.A. • 2M-Z2xxxx • Rev - • 3.2017
Specifications are subject to change without notice and are not intended for installation purposes.

Star-Max® Gas Fryers

☐615FF ☐630FF

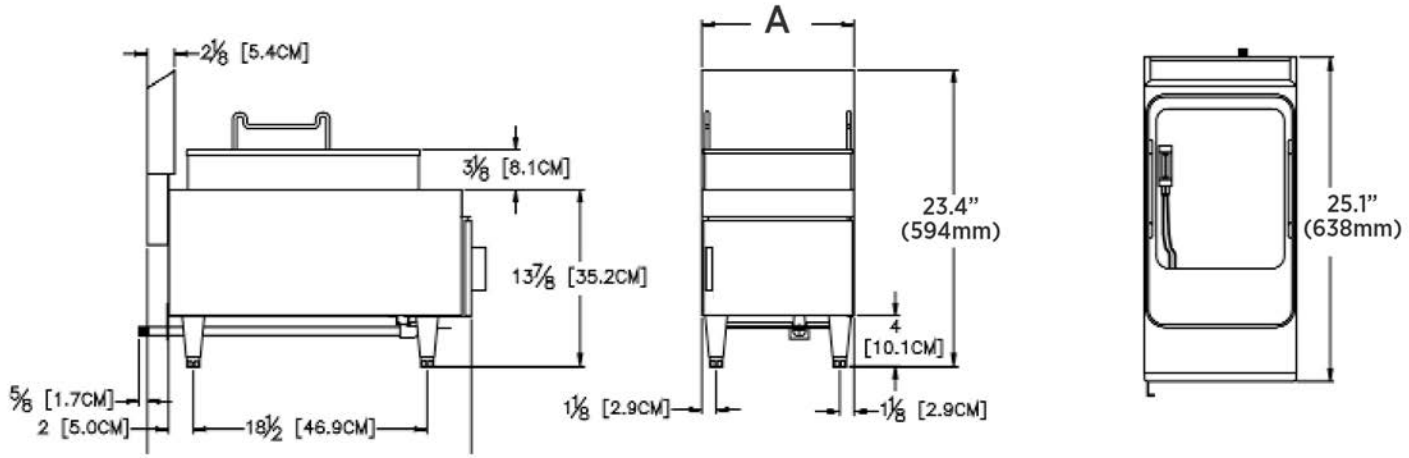

CLEARANCES

These units can be installed on non-combustible countertops using the provided four [4] inch (102 mm) legs or on a combustible floor using a minimum 27-inch (636 mm) tall stand. The back and both sides must be at least three [3] inches (76 mm) from any combustible surface.

MODEL	DESCRIPTION	OIL CAPACITY [lb.]	LBS OF FRENCH FRIES PER HOUR	HEIGHT in. (mm)	WIDTH [A] in. (mm)	DEPTH in. (mm)	BTU[1]	TYPE CONNECTIONS	APPROX. SHIP WEIGHT	APPROX. WEIGHT INSTALLED
615FF	UNDER FIRED TWIN BASKETS	15	28 lb. (13 kg)	23.4 (594)	12 (305)	25.1 (638)	30,000	3/8" N.P.T Female (1 cm)	75 lb. (34 kg)	64 lb (29 kg)
630FF	UNDER FIRED FULL BASKETS	30	65 lb. (30 kg)	23.4 (594)	24 (610)	25.1 (638)	70,000	1/2" N.P.T. Female	118 lb. (54 kg)	110 lb (50 kg)

[1]630FF in LP service operates at 65,000 BTU Specify Natural Gas or Propane when ordering

	FAT CONTAINER DIMS			FOAM COMPARTMENT DIMS				
MODEL	HEIGHT in. (mm)	WIDTH in. (mm)	DEPTH in. (mm)	HEIGHT in. (mm)	WIDTH in. (mm)	DEPTH in. (mm)	PRE-HEAT TO 350°F (177°C)	BTU'S PER HOUR TO MAINTAIN 350°F (177°C)
615FF	4.75 (121)	10.5 (267)	12.5 (318)	2.75 (70)	11.5 (292)	18 (457)	14 Minutes	4,900
630FF	4.75 (121)	20.9 (531)	12.5 (318)	2.75 (70)	21.9 (556)	18 (457)	12 Minutes	5,500

Due to periodic changes in designs, methods, procedures, policies and regulations, the specifications contained in this sheet are subject to change without notice. While Star Manufacturing exercises good faith efforts to provide information that is accurate, we are not responsible for errors or omissions in information provided or conclusions reached as a result of using the specifications. By using the information provided, the user assumes all risks in connection with such use.

STAR MANUFACTURING INTERNATIONAL INC.
10 Sunnen Drive • Saint Louis, Missouri 63143
Telephone 800 264 7827 • Fax 314 781 5445
www.star-mfg.com

Printed in the U.S.A. • 2M-Z2xxxx • Rev - • 3.2017
Specifications are subject to change without notice and are not intended for installation purposes.