T&S BRASS AND BRONZE WORKS, INC.

2 Saddleback Cove / P.O. Box 1088
Travelers Rest, SC 29690

Travelers Rest, SC: 800-476-4103 • Simi Valley, CA: 800-423-0150 • Fax: 864-834-3518 • www.tsbrass.com

Model No.
B-0133-CR

Item No.

This Space for Architect/Engineer Approval

Job Name_____Date_____

Model Specified_____ Quantity_____

Customer/Wholesaler_____

Contractor_____

Architect/Engineer_____

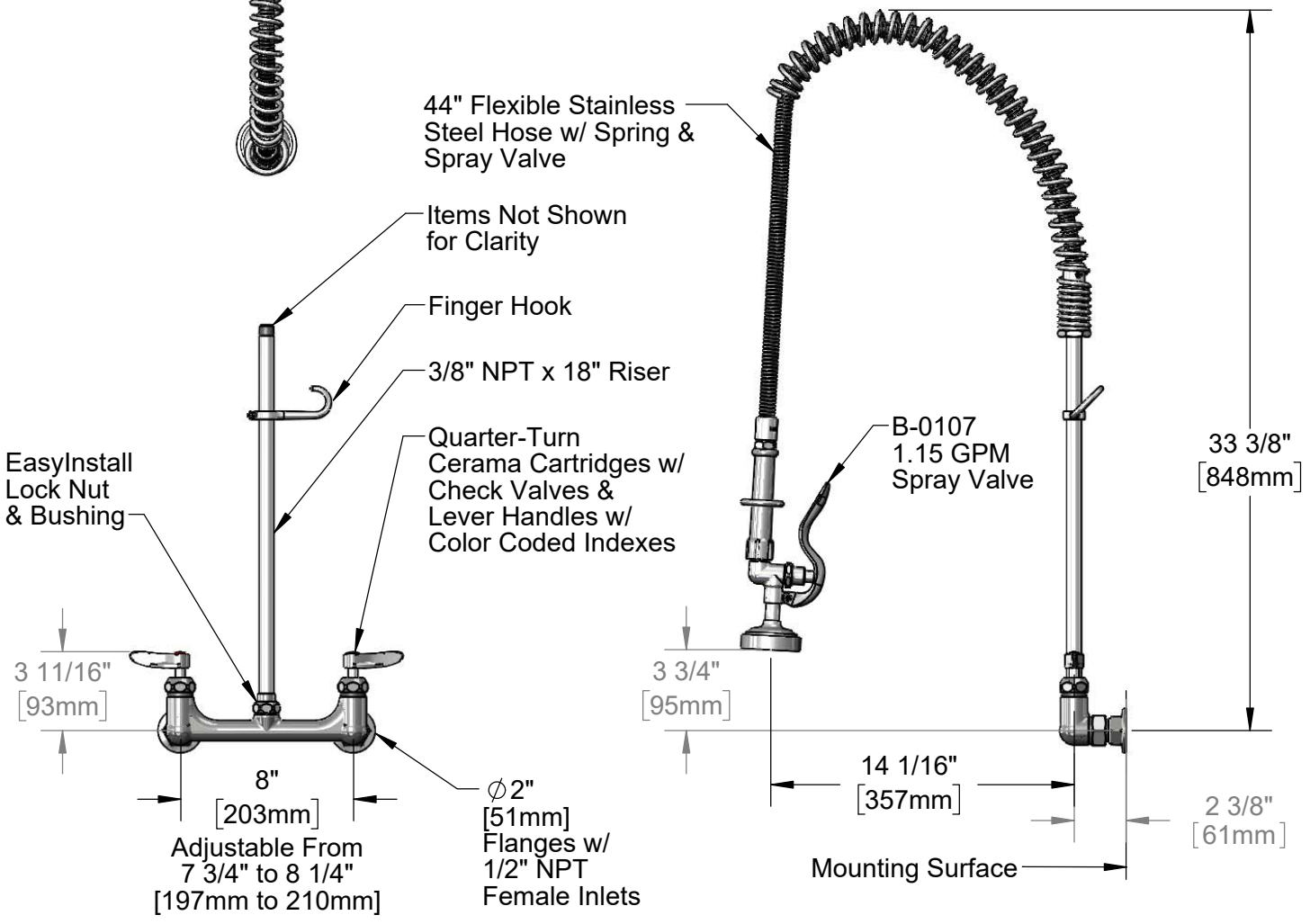

Product Specifications:

Pre-Rinse Unit: EasyInstall 8" Wall Mount Mixing Faucet, Quarter-Turn Cerama Cartridges w/ Check Valves, Lever Handles, 44" Flexible Stainless Steel Hose, 1.15 GPM Spray Valve & 1/2" NPT Female Inlets

Product Compliance:

ASME A112.18.1 / CSA B125.1
NSF 61 - Section 9
NSF 372 (Low Lead Content)
2019 DOE PRSV - Class II

Drawn:	Checked:	Approved:	Date:	Scale:	Sheet:
AMG	JRM	JHB	10/15/18	1:8	1 of 2

T&S BRASS AND BRONZE WORKS, INC.

2 Saddleback Cove / P.O. Box 1088
Travelers Rest, SC 29690

Travelers Rest, SC: 800-476-4103 • Simi Valley, CA: 800-423-0150 • Fax: 864-834-3518 • www.tsbrass.com

Model No.
B-0133-CR

Item No.

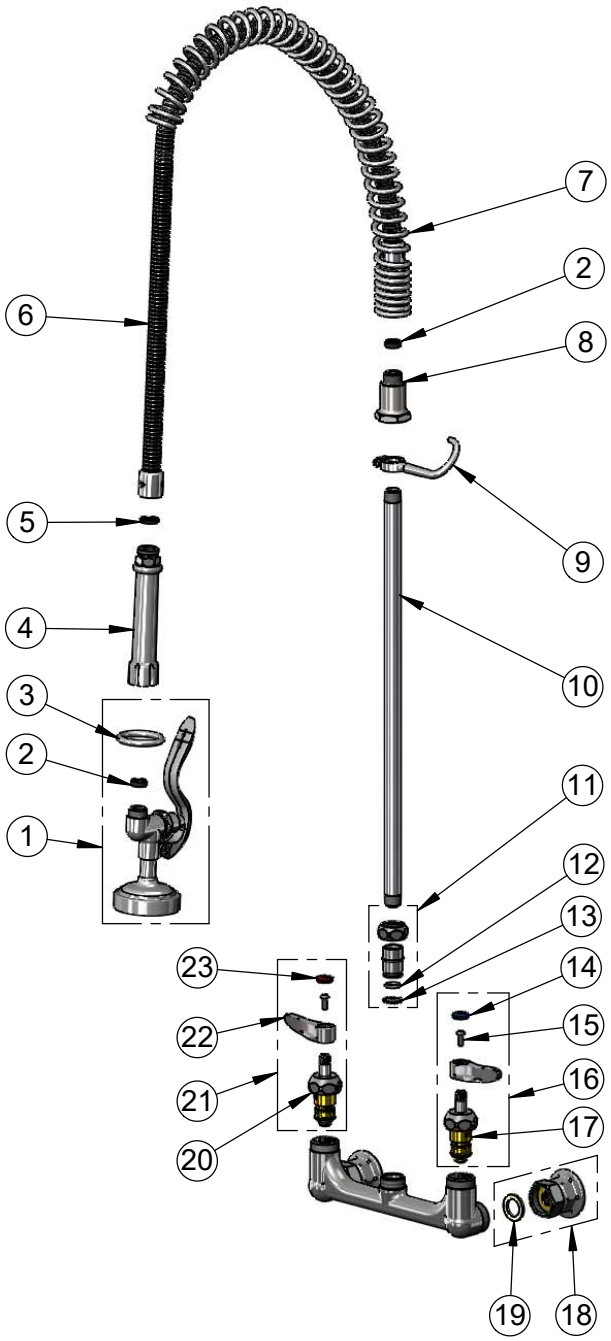

ITEM NO.	SALES NO.	DESCRIPTION
1	B-0107	1.15 GPM Spray Valve
2	010476-45	#27 Washer
3	000907-45	Spray Valve Hold Down Ring
4	002987-40	Grip Handle
5	001014-45	Washer, B-0100 Hose Barrel
6	B-0044-H2A	44" Flexible Stainless Steel Hose, Less grip Handle
7	000888-45	EasyInstall Overhead Spring
8	000821-40	Spring Body
9	004R	Finger Hook
10	000369-40	3/8" NPT x 18" Riser
11	EZ-K	EasyInstall Kit
12	001065-45	O-Ring
13	014200-45	Star Washer, Anti-Rotation
14	018506-19NS	Blue Button Index, Press-in
15	000925-45	Lab Handle Screw
16	012447-25NS	Quarter-Turn Cerama Cartridge w/ Check Valve, Handle, Blue Index & Screw, LTC
17	012395-25NS	Quarter-Turn Cerama Cartridge w/ Check Valve, LTC
18	00AA	1/2" NPT Female Eccentric Flange
19	001019-45	Coupling Nut Washer
20	012394-25NS	Quarter-Turn Cerama Cartridge w/ Check Valve, RTC
21	012446-25NS	Quarter-Turn Cerama Cartridge w/ Check Valve, Handle, Red Index & Screw, RTC
22	001638-45NS	Lever Handle (New Style)
23	001193-19NS	Red Button Index, Press-in

Product Specifications:

Pre-Rinse Unit: EasyInstall 8" Wall Mount Mixing Faucet, Quarter-Turn Cerama Cartridges w/ Check Valves, Lever Handles, 44" Flexible Stainless Steel Hose, 1.15 GPM Spray Valve & 1/2" NPT Female Inlets

Product Compliance:

ASME A112.18.1 / CSA B125.1
NSF 61 - Section 9
NSF 372 (Low Lead Content)
2019 DOE PRSV - Class II

Drawn:	Checked:	Approved:	Date:	Scale:	Sheet:
AMG	JRM	JHB	10/15/18	NTS	2 of 2