T&S BRASS AND BRONZE WORKS, INC.

2 Saddleback Cove / P.O. Box 1088
Travelers Rest, SC 29690

Travelers Rest, SC: 800-476-4103 • Simi Valley, CA: 800-423-0150 • Fax: 864-834-3518 • www.tsbrass.com

Model No.

B-0256

Item No.

ADA Compliant

This Space for Architect/Engineer Approval

Job Name_____ Date_____

Model Specified_____ Quantity_____

Customer/Wholesaler_____

Contractor_____

Architect/Engineer_____

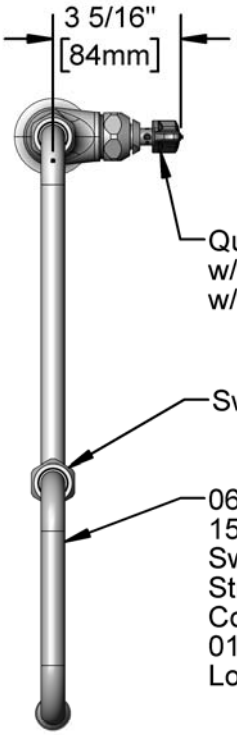

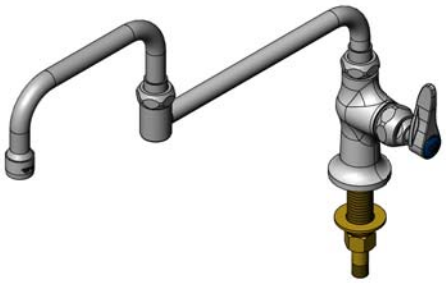

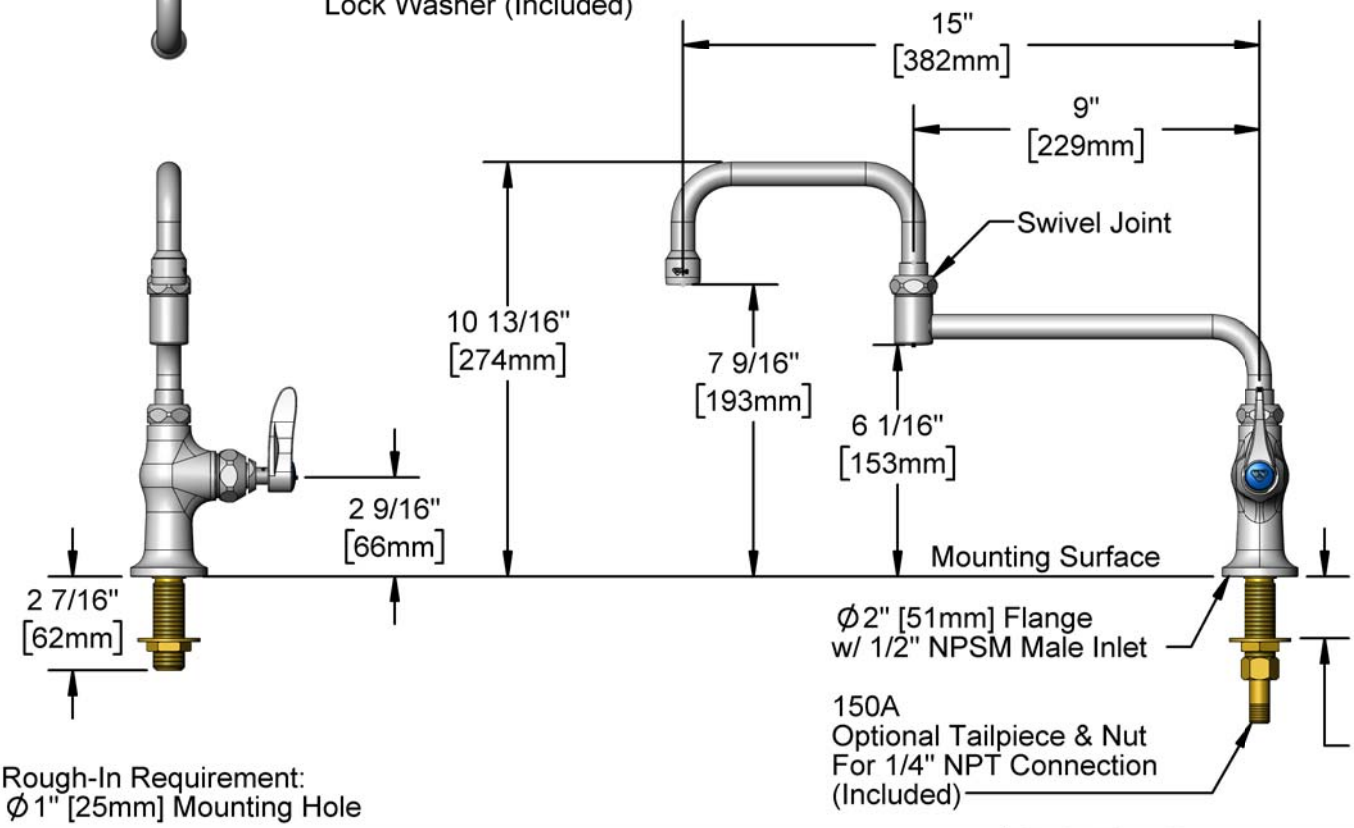

Rough-In Requirement:
Ø1" [25mm] Mounting Hole

Product Specifications:

Single Hole Single Temperature Deck Mount Faucet, Quarter-Turn Eterna Cartridge w/ Spring Check, Lever Handle, 15" Double Joint Swing Nozzle & 1/2" NPSM Male Inlet

Product Compliance:

ASME A112.18.1 / CSA B125.1
NSF 61 - Section 9
NSF 372 (Low Lead Content)
ANSI A117.1 (ADA)

Drawn: KJG	Checked: JRM	Approved: JHB	Date: 12/10/19	Scale: 1:5	Sheet: 1 of 2

T&S BRASS AND BRONZE WORKS, INC.

2 Saddleback Cove / P.O. Box 1088
Travelers Rest, SC 29690

Travelers Rest, SC: 800-476-4103 • Simi Valley, CA: 800-423-0150 • Fax: 864-834-3518 • www.tsbrass.com

Model No.

B-0256

Item No.

ITEM NO.	SALES NO.	DESCRIPTION
1	067X	15" Double Joint Swing Nozzle
2	152X	9" Back Section
3	153X	6" Front Section
4	B-PT	Stream Regulator Outlet
5	009538-45	Swivel Washer
6	011429-45	Swivel Sleeves (2)
7	001074-45	O-Ring
8	014200-45	Star Washer, Anti-Rotation
9	019639-40	Quarter-Turn Eterna Cartridge RTC w/ Spring Check, Handle, Blue Index & Screw
10	012443-40NS	Quarter-Turn Eterna Cartridge w/ Spring Check, RTC
11	001638-45NS	Lever Handle (New Style)
12	000925-45	Lab Handle Screw
13	018506-19NS	Blue Button Index, Press-in
14	000999-45	Brass Lock Washer
15	002954-45	Shank Lock Nut
16	150A	1/4" NPT Tailpiece & Nut

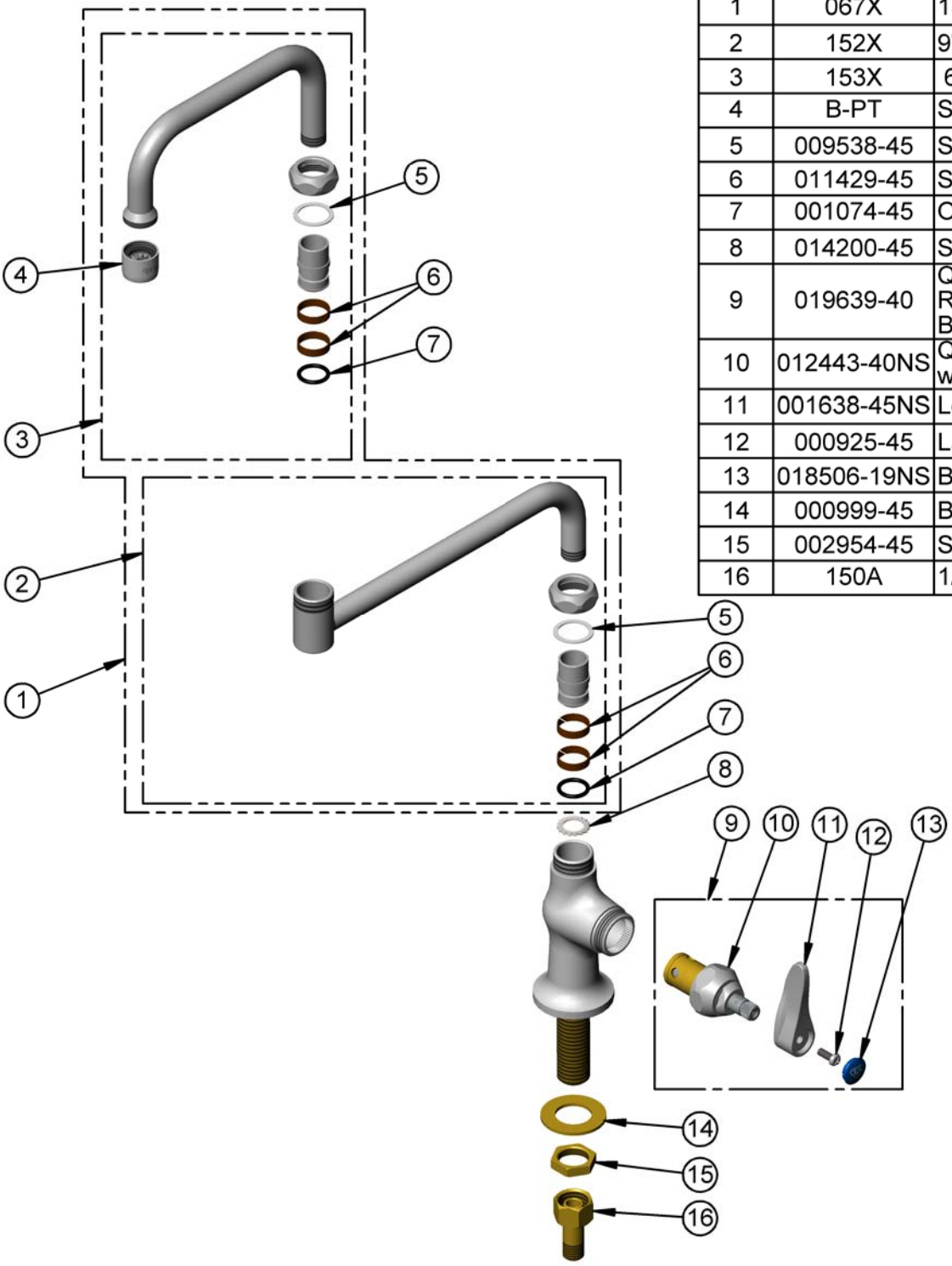

Product Specifications:

Single Hole Single Temperature Deck Mount Faucet, Quarter-Turn Eterna Cartridge w/ Spring Check, Lever Handle, 15" Double Joint Swing Nozzle & 1/2" NPSM Male Inlet

Product Compliance:

ASME A112.18.1 / CSA B125.1
NSF 61 - Section 9
NSF 372 (Low Lead Content)
ANSI A117.1 (ADA)

Drawn: KJG	Checked: JRM	Approved: JHB	Date: 12/10/19	Scale: NTS	Sheet: 2 of 2