GREEN WORLD

4184 E. Conant St.
Long Beach, CA 90808
Tel. 800-500-3519
Fax. 310-900-1066
www.turboairinc.com

Project :	
Model # :	
Item # :	Qty :
Available W/H :	
Approval :	

Wall Shelves

HIGH QUALITY 304 STAINLESS STEEL

Model : TSWS-

FEATURES & BENEFITS

- *All 304 stainless steel*
- *Wide selection of sizes*
- *Die-formed mounting brackets*
- *Space-saving wall mount design*

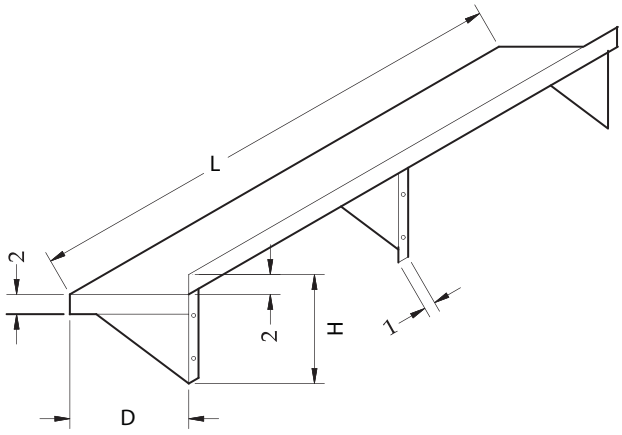

(Unit : inch)

Model *	Ga.	L	D	H	Net Weight †
TSWS-1224	18	24	12	10	10
TSWS-1236	18	36	12	10	12
TSWS-1248	18	48	12	10	14
TSWS-1260	18	60	12	10	17
TSWS-1272	18	72	12	10	19
TSWS-1284	18	84	12	10	22
TSWS-1296	18	96	12	10	24
TSWS-1424	18	24	14	11	11
TSWS-1436	18	36	14	11	13
TSWS-1448	18	48	14	11	15
TSWS-1460	18	60	14	11	19
TSWS-1472	18	72	14	11	21
TMWS-1922	18	22	19	10	10

Information and specifications are subject to change without notice.

* All units shipped knocked-down.

† All weights are approximated. Crafting fee will be added for shipping via common carriers (Please confirm at the time of the purchase).