Antunes
EXPECT SUCCESS

Roll Rite Roller Grill | RR

RR-50
(with Bun Box and Food Shield)

When roller grill products are moving on the grill, they move out the door. The Roll Rite roller grill uses innovative oval shape rollers so product doesn't get stuck, and the textured surface grips the product to keep it continuously turning. From burritos to egg rolls to stuffed breadsticks, this unit ensures roller grill food products of virtually all shapes and sizes are cooked evenly and look appetizing to customers.

FEATURES

- Oblong-shaped rollers ensure food product won't get stuck between rollers.
- Textured surface on rollers grips food product and ensures it's continuously turned.
- Thermostat controls for front and rear rollers allow you to adjust the temperature for the specific food product.
- Evenly cooks virtually all roller grill products—egg rolls, burritos, stuffed breadsticks, taquitos, and more.
- Available in three different capacities—30, 50, and 75.

Roll Rite Roller Grill | RR

Dimensions

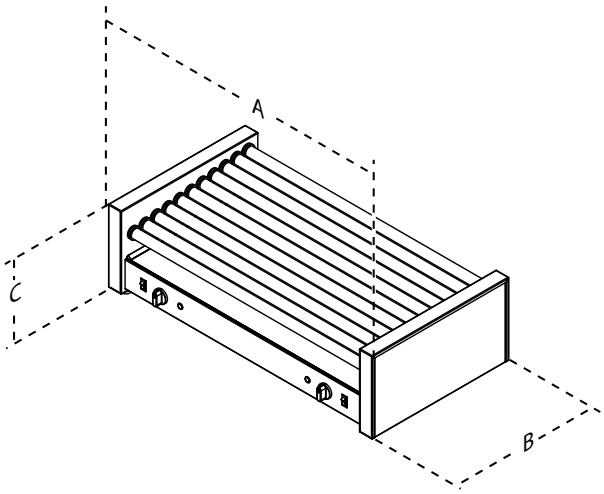

Model & Mfg. No.	Width (A)	Depth (B)	Height (C)	Operating Weight
RR-30 9300400	23 3/4" (603 mm)	18 9/16" (471 mm)	10 3/16" (259 mm)	45 lbs. (20 kg)
RR-50 9300402	35 3/4" (908 mm)	18 9/16" (471 mm)	10 3/16" (259 mm)	65 lbs. (29 kg)
RR-75 9300404	35 3/4" (908 cm)	26 3/8" (670 mm)	10 3/16" (259 mm)	80 lbs. (36 kg)

Shipping Dimensions

Model & Mfg. No.	Height	Width	Depth	Weight
RR-30 9300400	20" (508 mm)	28" (711 mm)	24" (610 mm)	55 lbs.
RR-50 9300402	23" (584 mm)	40" (1016 mm)	24" (610 mm)	90 lbs.
RR-75 9300404	21" (533 mm)	40" (1016 mm)	32" (813 mm)	90 lbs.

Electrical Ratings and Plug Configuration

Model & Mfg. No.	Volts	Watts	Amps	Hertz	Plug Description
RR-30 9300400	120	1100	9.2	60	NEMA 5-20P
RR-50 9300402	120	1430	11.9	60	NEMA 5-20P
RR-75 9300404	120	1920	16	60	NEMA 5-20P

Specifications

Model & Mfg. No.	Capacity	No. of Rollers	Hold Range	Cook Range
RR-30 9300400	30	11	140°F to 180°F (60°C to 82°C)	180°F to 220°F (82°C to 104°C)
RR-50 9300402	50	11	140°F to 180°F (60°C to 82°C)	180°F to 220°F (82°C to 104°C)
RR-75 9300404	75	16	140°F to 180°F (60°C to 82°C)	180°F to 220°F (82°C to 104°C)

Additional Items

Model & Mfg. No.	Description	For Use With
RRBB-30 9400182	Bun box	RR-30
RRBB-50 9400180	Bun box	RR-50
RRBB-75 9400183	Bun box	RR-75

Accessories

Model & Mfg. No.	Description	For Use With
SRR-30 9390113	Protective food shield	RR-30
SRR-50 9390114	Protective food shield	RR-50
CRR-30 9390108	Protective canopy	RR-30
CRR-50 9390110	Protective canopy	RR-50
CRR-75 9390112	Protective canopy	RR-75

P/N 1020368 03/17

Corporate Headquarters
Carol Stream, Illinois
Phone: (630) 784-1000
Toll Free: (800) 253-2991
Fax: (630) 784-1650

China Facility
Suzhou, China
Phone: 86-512-6841-3637
Fax: 86-512-6841-3907