JOB:
ITEM:
QTY:

Made in the USA

RAC LINE EQUIPMENT STANDS

APPLICATION:

These solid shelf aluminum equipments stands have a marine edge to contain spills. The load rating is 400 pounds per shelf. Has the option of a stationary or mobile unit.

MATERIAL:

These shelves are constructed out of .040" aluminum with 1 1/2"x
1 1/2"x.070" wall tube reinforcement. The posts are constructed out of 1 5/16" aluminum pipe with a 5/32" wall thickness.

CASTERS:

The casters that come with the caster options are four 5"x1 3/8" stem casters, all with brake. Posts with the caster option are 6" shorter to equal listed height.

GUARANTEE:

This table carries a **Lifetime Guarantee** against rust and corrosion and also carries a **One-Year Guarantee** against workmanship and material defects.

Model #21524ES24P

Phone:800-255-0104
Fax: 877-877-7687
www.newageindustrial.com
sales@newageindustrial.com

New Age Industrial reserves the right to modify or make changes at any time without notice to materials and specifications.

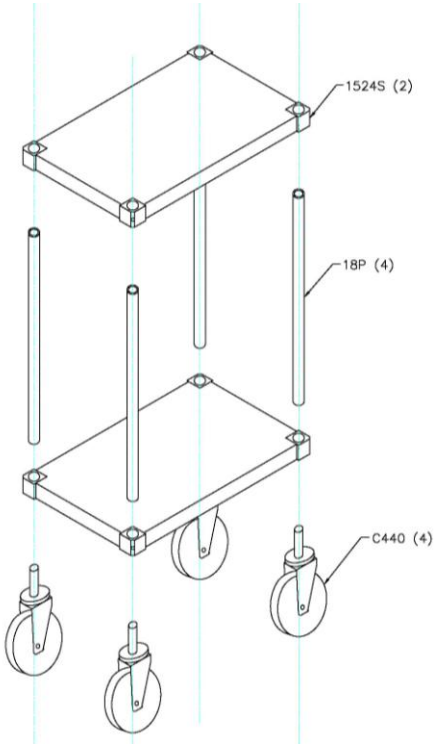

Model #21524ES24PC

Model Number	SIZE D - L - H	Model Number	SIZE D - L - H	Model Number	SIZE D - L - H
	24" High		**30" High**		**36" High**
21524ES24P	15" x 24" x 24"H	21524ES30P	15" x 24" x 30"H	21524ES36P	15" x 24" x 36"H
21530ES24P	15" x 30" x 24"H	21530ES30P	15" x 30" x 30"H	21530ES36P	15" x 30" x 36"H
21536ES24P	15" x 36" x 24"H	21536ES30P	15" x 36" x 30"H	21536ES36P	15" x 36" x 36"H
21542ES24P	15" x 42" x 24"H	21542ES30P	15" x 42" x 30"H	21542ES36P	15" x 42" x 36"H
21548ES24P	15" x 48" x 24"H	21548ES30P	15" x 48" x 30"H	21548ES36P	15" x 48" x 36"H
21824ES24P	18" x 24" x 24"H	21824ES30P	18" x 24" x 30"H	21824ES36P	18" x 24" x 36"H
21830ES24P	18" x 30" x 24"H	21830ES30P	18" x 30" x 30"H	21830ES36P	18" x 30" x 36"H
21836ES24P	18" x 36" x 24"H	21836ES30P	18" x 36" x 30"H	21836ES36P	18" x 36" x 36"H
21842ES24P	18" x 42" x 24"H	21842ES30P	18" x 42" x 30"H	21842ES36P	18" x 42" x 36"H
21848ES24P	18" x 48" x 24"H	21848ES30P	18" x 48" x 30"H	21848ES36P	18" x 48" x 36"H
22024ES24P	20" x 24" x 24"H	22024ES30P	20" x 24" x 30"H	22024ES36P	20" x 24" x 36"H
22030ES24P	20" x 30" x 24"H	22030ES30P	20" x 30" x 30"H	22030ES36P	20" x 30" x 36"H
22036ES24P	20" x 36" x 24"H	22036ES30P	20" x 36" x 30"H	22036ES36P	20" x 36" x 36"H
22042ES24P	20" x 42" x 24"H	22042ES30P	20" x 42" x 30"H	22042ES36P	20" x 42" x 36"H
22048ES24P	20" x 48" x 24"H	22048ES30P	20" x 48" x 30"H	22048ES36P	20" x 48" x 36"H

*Add **"C"** suffix to model number for caster option ex 22048ES36PC

Phone:800-255-0104
Fax: 877-877-7687
www.newageindustrial.com
sales@newageindustrial.com

New Age Industrial reserves the right to modify or make changes at any time without notice to materials and specifications.