Item No. _____
Quantity _____

# BEVERAGE-AIR

3779 Champion Blvd., Winston-Salem, NC 27105
1-888-845-9800 Fax# 1-336-245-6453
http://www.Beverage-Air.com

**Commercial Refrigeration Equipment**
**General Specification**

## BEER EQUIPMENT SOLID DOOR BACK BAR REFRIGERATORS 23" BASE

**BB SERIES**

**MODELS:**
**BB48Y/48R**
**BB72Y/72R**

### BB 23" BASE SERIES—BACK BAR REFRIGERATOR

Shallow depth, back bar, self-contained refrigerators come in two widths of 48" and 72." Two heights include 34" with standard galvanized steel top for under shelf application and 36" when adapted with a stainless steel top. Depth is 23" from face of door to back of cabinet. Handle projects 1/2." Solid door models come standard with locks.

### CABINET CONSTRUCTION

Standard, cabinet exterior construction includes attractive, wear resistant vinyl on steel in black exterior finish. Doors are self-closing and include magnetic gaskets for positive seal.

Standard interior construction utilizes galvanized steel walls and ceiling. Reinforced floor and door sills are made from heavy-duty stainless steel to provide long lasting service. Interior, incandescent, lighting is standard with manual on/off switch.

Foamed-in-place CFC and HCFC-free polyurethane insulation enhances the structural strength of the cabinet and helps increase energy efficiency.

### REFRIGERATION

Refrigeration is fully accessible behind grille to right side of cabinet. Evaporator located above condensing unit permits full use of interior spaces. Forced air is projected the length of cabinet across the ceiling. Refrigeration system uses R134a refrigerant, which is CFC and HCFC-free for compliance with environmental safety concerns. Remote refrigeration models include expansion valve installed.

Condensate elimination is automatic and non-electric.

### ELECTRICAL

Units wired at factory and ready for connection to a 115/60/1 phase, 15 amp dedicated outlet. 8' long cord and plug set included.

### SPECIAL FEATURES

- Keg storage is maximized in lieu of shelf storage when required.

**BB48Y**

**BB72Y**

*Note: Not all markings may apply to all model variations.

Available From:

| | | | |
|---|---|---|---|
| **Model Specified** | _____ | **Store#** | _____ |
| **Location** | _____ | **Quantity** | _____ |

BEVERAGE-AIR

## Back Bar Refrigerators, 23” Base
### Models: BB48Y, BB48R, BB72Y, BB72R

| MODEL | BB48Y | BB48R | BB72Y | BB72R |
|---|---|---|---|---|
| **EXTERNAL DIMENSIONAL DATA** | | | | |
| Length Overall (inches)<br>Length Overall (mm) | 48”<br>1219 | 48”<br>1219 | 72”<br>1829 | 72”<br>1829 |
| Depth Overall (inches)<br>Depth Overall (mm) | 23 1/2”<br>597 | 23 1/2”<br>597 | 23 1/2”<br>597 | 23 1/2”<br>597 |
| Height Overall— (inches)<br>Height Overall—(mm) | 34”<br>864 | 34”<br>864 | 34”<br>864 | 34”<br>864 |
| Clear Door Width (inches) | 16 7/16” x 29 1/4” | 16 7/16” x 29 1/4” | 17 7/8” x 29 1/4” | 17 7/8” x 29 1/4” |
| Depth With Door Open 90° | 41 3/8” | 41 3/8” | 42 3/4” | 42 3/4” |
| Number of doors | 2 | 2 | 3 | 3 |
| **INTERNAL DIMENSIONAL DATA** | | | | |
| NET Capacity (cubic ft.)<br>NET Capacity (Liters) | 12.1<br>343 | 12.1<br>343 | 19.4<br>549 | 19.4<br>549 |
| Internal Length Overall (inches)<br>Internal Length Overall (mm) | 36”<br>914 | 36”<br>914 | 60”<br>1524 | 60”<br>1524 |
| Internal Depth Overall (inches)<br>Internal Depth Overall (mm) | 18 1/2”<br>470 | 18 1/2”<br>470 | 18 1/2”<br>470 | 18 1/2”<br>470 |
| Internal Height Overall (inches)<br>Internal Height Overall (mm) | 29 1/2”<br>749 | 29 1/2”<br>749 | 29 1/2”<br>749 | 29 1/2”<br>749 |
| Number of Shelves | 4 | 4 | 6 | 6 |
| Number of Kegs (straight wall) | 2 | 2 | 3 | 3 |
| **ELECTRICAL DATA** | | | | |
| Full Load Amperes 115/60/1 | 5.0 | remote | 5.0 | remote |
| **REFRIGERATION DATA** | | | | |
| Horsepower | 1/4 | remote | 1/4 | remote |
| **WEIGHT DATA** | | | | |
| Gross Weight (Crated lbs) | 269 | 223 | 366 | 330 |
| Gross Weight (Crated kg) | 122 | 101 | 166 | 150 |

***Note**: Not all markings may apply to all model variations.
***N/A:** Not available at time of printing.

## PLAN VIEWS

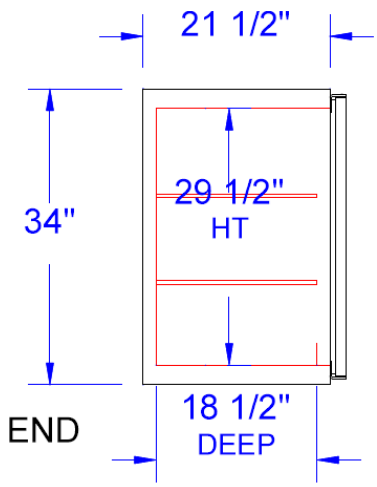


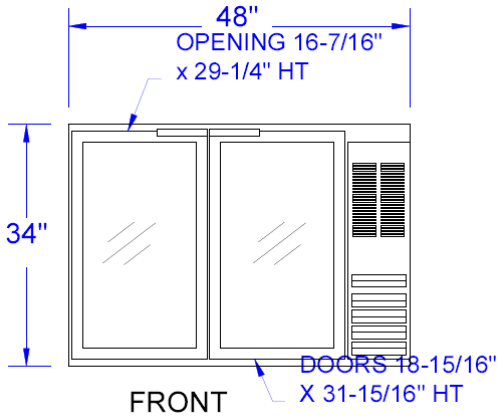


**BB48Y**

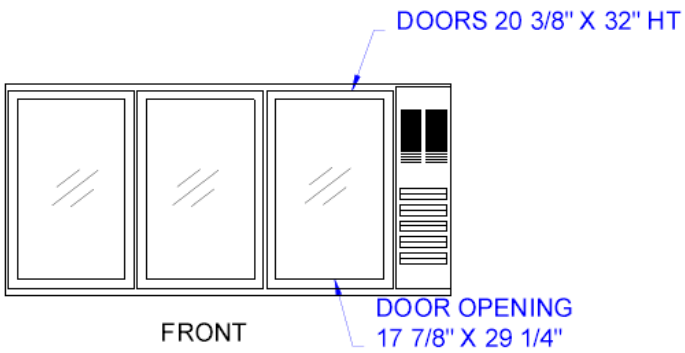


**BB72Y**

## ELECTRICAL CONNECTION
Units pre-wired at factory and include 8’ long cord and plug set.

115/60/1
NEMA-5-15P


**BEVERAGE-AIR® CORPORATION**
3779 Champion Blvd. • Winston-Salem, NC 27105 USA • (336) 245-6400 • Fax (336) 245-6453 • (888) 845-9800 • www.beverage-air.com



Specifications are subject to change without prior notice. 11/11
KaTom Restaurant Supply, Inc.