ADVANCE TABCO®
SMART FABRICATION™

PRESTIGE
Signature Series

Ice Bin & Bottle Storage Combo Units

20” and 25” Wide Units

PRC-19-48LR
Shown

NEW DESIGN FOR 2015

Item #: _____ Qty #: _____
Model #: _____
Project #: _____

MECHANICAL:

1” IPS drain - non cold plate bin
1/2” IPS drain - cold plate bin

MATERIAL:

20 gauge, 300 stainless steel

Legs: 1 5/8” O.D. 18 gauge, 300 stainless steel legs with 1” adjustable stainless steel bullet feet

Cold Plate: Cast aluminum with 10 circuits (8 syrup and 2 water lines) with 5/16” diameter stainless steel bump and swedge ends.

Ice Bin Insulation: 2 lbs. density foam-in-place

FEATURES:

10.178” deep ice bin with 7” backsplash.
1 3/4” return with soda gun knock-out.
Insulated storage bin(s) and ice bin.
Welded partition between bins.
Two removable injection molded 3-pack plastic bottle racks.
Stainless steel top, apron & sides.
Optional 10-circuit cold plate sealed into bottom of ice bin.
Adjustable side cross-bracing

PRC-24 Series has rear deck for extra storage.

Bottle Racks Must Be Removed For NSF Compliance And For Use With Optional Cover.

OPTIONAL:

PRA-SSC-12 - Sliding cover for 12” ice bin
PRA-SSC-24 - Sliding cover for 24” ice bin
PRA-SSC-30 - Sliding cover for 30” ice bin
PRA-SSC-36 - Sliding cover for 36” ice bin
PRA-SSC-42 - Sliding cover for 42” ice bin
PRA-SSC-48 - Sliding cover for 48” ice bin

Optional Sliding Stainless Steel Cover Shown

For More Accessories & Modifications, Visit Us At www.advancetabco.com.

20” WIDE Model #	Approx. Weight	Approx. Cu. Ft.	25” WIDE Model #	Approx. Weight	Approx. Cu. Ft.	O.A. Length (A)	Distance To Drain (B)/(C)	# of Ind. Bins	Ice Bin Capacity*
PRC-19-36L or R	90 lbs.	12	PRC-24-36L	105 lbs.	12	36”	12” / 30”	2	70/32 lbs.
PRC-19-42L or R	105 lbs.	14	PRC-24-42L	110 lbs.	14	42”	15” / 36”	2	89/32 lbs.
PRC-19-48L or R	115 lbs.	16	PRC-24-48L	120 lbs.	16	48”	18” / 42”	2	108/32 lbs.
PRC-19-48LR	145 lbs.	16	PRC-24-48LR	160 lbs.	16	48”	N/A	3	32/70/32 lbs.
PRC-19-54LR	150 lbs.	18	PRC-24-54LR	165 lbs.	18	54”	N/A	3	32/89/32 lbs.
PRC-19-60LR	155 lbs.	20	PRC-24-60LR	170 lbs.	20	60”	N/A	3	32/108/32 lbs.

With 10-Circuit Cold Plate

PRC-19-36L-10 or R-10	160 lbs.	12	PRC-24-36L-10	165 lbs.	12	36”	12” / 30”	2	70/32 lbs.
PRC-19-42L-10 or R-10	170 lbs.	14	PRC-24-42L-10	175 lbs.	14	42”	15” / 36”	2	89/32 lbs.
PRC-19-48L-10 or R-10	180 lbs.	16	PRC-24-48L-10	185 lbs.	16	48”	18” / 42”	2	108/32 lbs.
PRC-19-48LR-10	180 lbs.	16	PRC-24-48LR-10	195 lbs.	16	48”	N/A	3	32/70/32 lbs.
PRC-19-54LR-10	185 lbs.	18	PRC-24-54LR-10	200 lbs.	18	54”	N/A	3	32/89/32 lbs.
PRC-19-60LR-10	190 lbs.	20	PRC-24-60LR-10	205 lbs.	20	60”	N/A	3	32/108/32 lbs.

***Reverse ice bin capacities for L or R models**
L and R indicate ice bin location on either left or right side. LR indicates ice bin is centered.

ADVANCE TABCO®
SMART FABRICATION™
www.advancetabco.com

Customer Service Available To Assist You 1-800-645-3166 8:30 am - 8:00 pm E.S.T.

For Orders & Customer Service:
Email: customer@advancetabco.com or **Fax:** 631-242-6900

For Smart Fabrication™ Quotes:
Email: smartfab@advancetabco.com or **Fax:** 631-586-2933

DIMENSIONS and SPECIFICATIONS

TOL Overall: ± .500” Interior: ± .250”

ALL DIMENSIONS ARE TYPICAL

PRC-19 Series

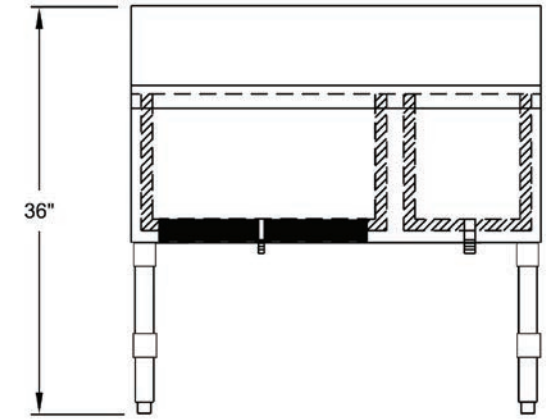

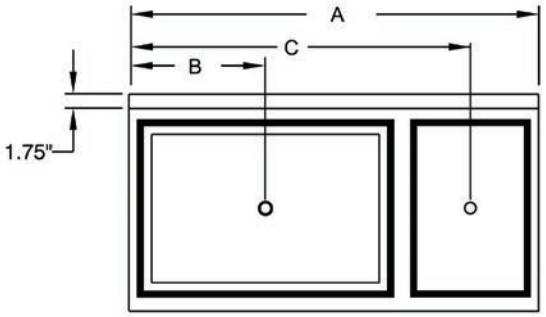

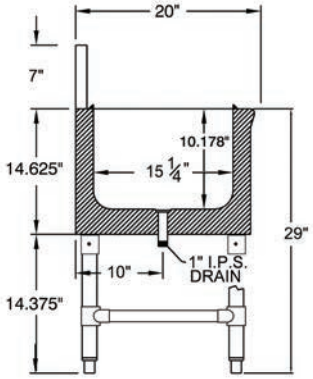

Non-Cold Plate

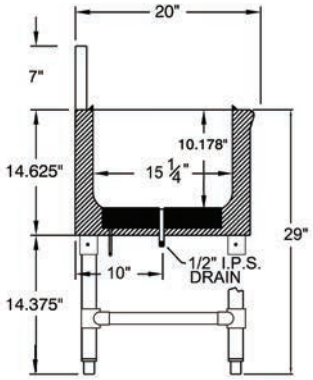

With 10-Circuit Plate

PRC-24 Series

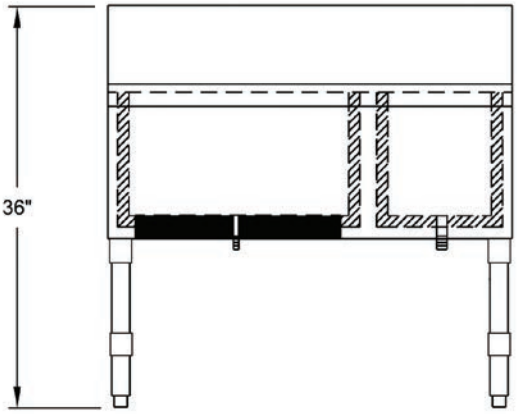

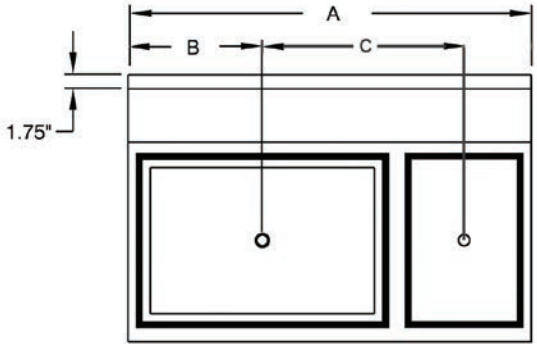

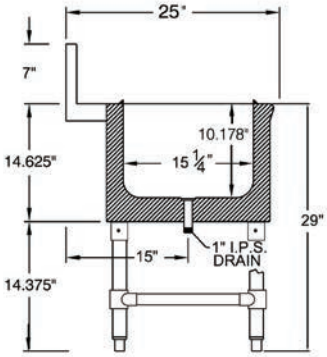

Non-Cold Plate

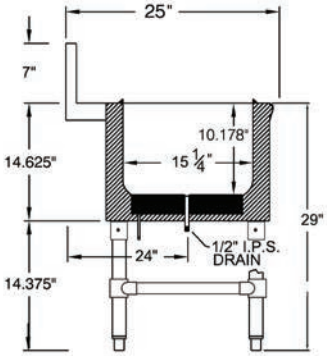

With 10-Circuit Plate

ADVANCE TABCO®
SMART FABRICATION™

200 Heartland Boulevard, Edgewood, NY 11717-8380

ADVANCE TABCO is constantly engaged in a program of improving our products. Therefore, we reserve the right to change specifications without prior notice.

© ADVANCE TABCO, MARCH 2016