ADVANCE TABCO
SMART FABRICATION™

PRESTIGE
Signature Series

Blender Station w/ Drainboard

25” and 30” Wide Units

NSF

NEW DESIGN FOR 2015

Item #: _____ Qty #: _____

Model #: _____

Project #: _____

PRDB-19 Series
25” Wide Units

PRDB-24 Series
30” Wide Units

15A - 120V Duplex Receptacle Hidden Beneath Blender Shelf

UL LISTED

FEATURES:

Removable perforated drainboard top.
Recessed blender shelf with grommet hole.
15A - 120V electrical duplex outlet hidden beneath shelf for blenders.
Sound deadened.
Stainless steel top, apron, sides and legs with 1” adjustable stainless steel bullet feet
Adjustable stainless steel side cross-bracing
7” backsplash.
PRDB-24 Series has rear deck for extra storage

MATERIAL:

Drainboard: 18 gauge, 300 stainless steel
Body Sides & Backsplash: 20 gauge, 300 stainless steel
Blender Shelf Sides: 14 gauge, 300 stainless steel
Legs: 1 5/8” O.D. 18 gauge, 300 stainless steel with 1” adjustable stainless steel bullet feet

MECHANICAL:

1” IPS drain
15A - 120V duplex receptacle

OPTIONAL:

A-15 - Chrome towel ring (packed loose)
SU-24 - Connect underbar equipment

25” WIDE Model #	Overall Length (L)	Dist. To Drain (A)	Dist. To Drain (B)	Approx. Weight	Approx. Cu. Ft.
PRDB-19-12	12”	9”	4 3/4”	28 lbs.	9
PRDB-19-18	18”	15”	4 3/4”	30 lbs.	9

30” WIDE Model #	Overall Length (L)	Dist. To Drain (A)	Dist. To Drain (B)	Approx. Weight	Approx. Cu. Ft.
PRDB-24-12	12”	9”	9 3/4”	28 lbs.	11
PRDB-24-18	18”	15”	9 3/4”	30 lbs.	11

NOTE: Blender Stations Can Not Accommodate A Speed Rail

ADVANCE TABCO
SMART FABRICATION™
www.advancetabco.com

Customer Service Available To Assist You 1-800-645-3166 8:30 am - 8:00 pm E.S.T.

For Orders & Customer Service:
Email: customer@advancetabco.com or **Fax:** 631-242-6900

For Smart Fabrication™ Quotes:
Email: smartfab@advancetabco.com or **Fax:** 631-586-2933

DIMENSIONS and SPECIFICATIONS

TOL Overall: ± .500” Interior: ± .250”

ALL DIMENSIONS ARE TYPICAL

PRDB-19 Series

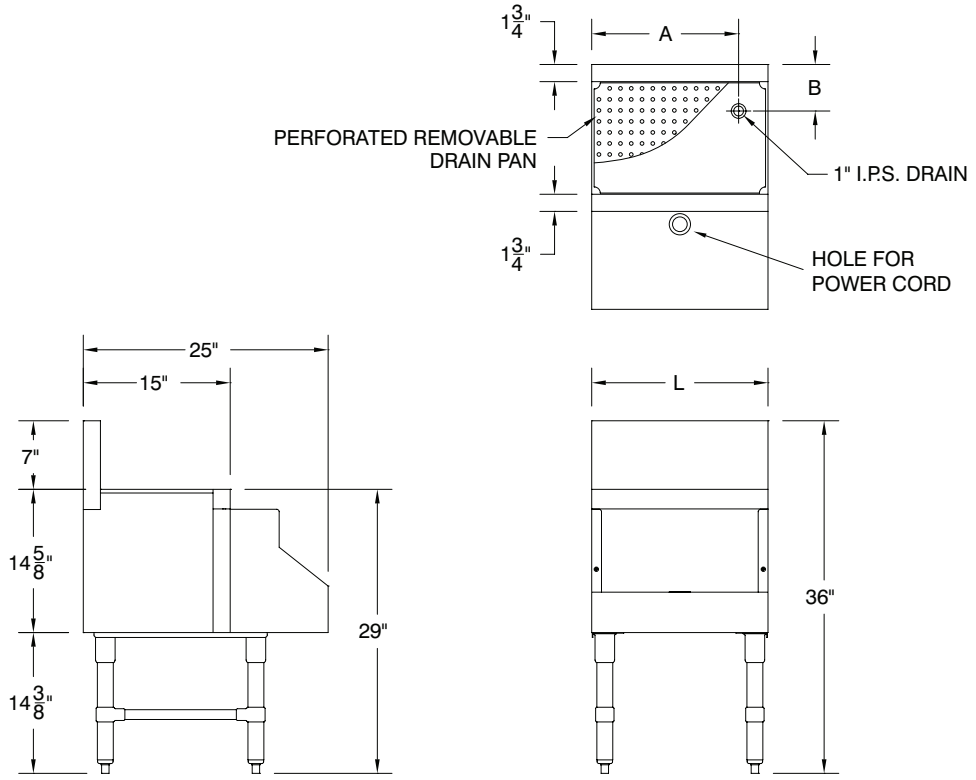

PRDB-24 Series

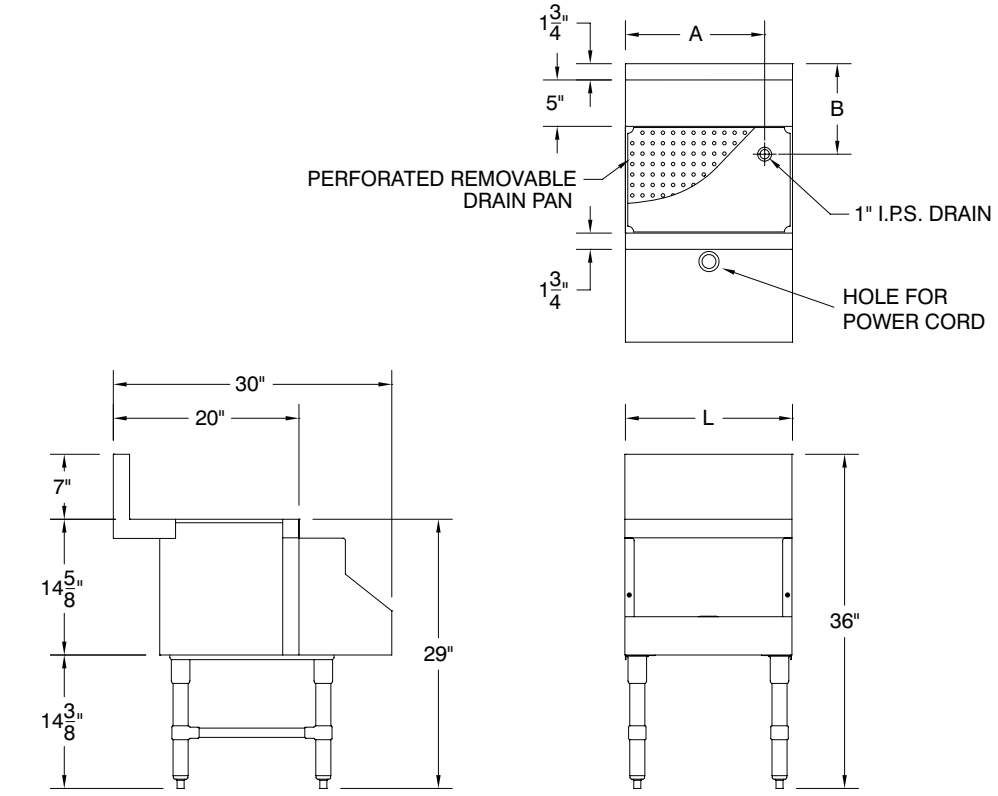

ADVANCE TABCO®
SMART FABRICATION™

ADVANCE TABCO is constantly engaged in a program of improving our products. Therefore, we reserve the right to change specifications without prior notice.

200 Heartland Boulevard, Edgewood, NY 11717-8380

© ADVANCE TABCO, NOVEMBER 2016