ADVANCE TABCO®
SMART FABRICATION™

STAINLESS STEEL

Recessed Bar Drainboards

18” and 21” Wide Units

NEW DESIGN FOR 2015

Item #: _____ Qty #: _____
Model #: _____
Project #: _____

SL-GS Series
18” Wide Units

CR-GS Series
21” Wide Units

FEATURES:

Holds multiple tiers of glassware.
Recessed embossed and seamless drainboard with side splashes.
Includes four galvanized legs with adjustable plastic bullet feet.
Adjustable galvanized side cross-bracing.
4” backsplash.
CR-GS Series has rear deck for extra storage

MATERIAL:

Shelf & Backsplash: 22 gauge, 300 stainless steel
Sides: 16 gauge, 430 stainless steel
Legs: 1 5/8” O.D. 18 gauge, galvanized steel with adjustable plastic bullet feet

MECHANICAL:

1” IPS drain

OPTIONAL:

SU-10A - 18” stainless steel legs with cross-bracing
SU-40 - Prep unit for installation of speed rail
SU-68 - Omit corrugation on drainboard

18” WIDE Model #	Approx. Weight	Approx. Cu. Ft.	21” WIDE Model #	Approx. Weight	Approx. Cu. Ft.	Overall Length (A)	Dist. To Drain (B)
SL-GS-12	20 lbs.	6	CR-GS-12	20 lbs.	6	12”	6”
SL-GS-15	22 lbs.	6	CR-GS-15	22 lbs.	6	15”	7 1/2”
SL-GS-18	24 lbs.	7	CR-GS-18	24 lbs.	8	18”	9”
SL-GS-24	28 lbs.	7	CR-GS-24	28 lbs.	8	24”	12”

ADVANCE TABCO®
SMART FABRICATION™
www.advancetabco.com

Customer Service Available To Assist You 1-800-645-3166 8:30 am - 8:00 pm E.S.T.

For Orders & Customer Service:
Email: customer@advancetabco.com or **Fax:** 631-242-6900

For Smart Fabrication™ Quotes:
Email: smartfab@advancetabco.com or **Fax:** 631-586-2933

DIMENSIONS and SPECIFICATIONS

TOL Overall: ± .500” Interior: ± .250”

ALL DIMENSIONS ARE TYPICAL

SL-GS Series

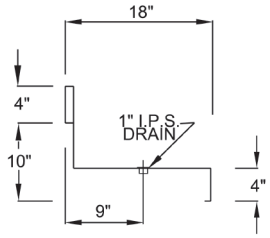

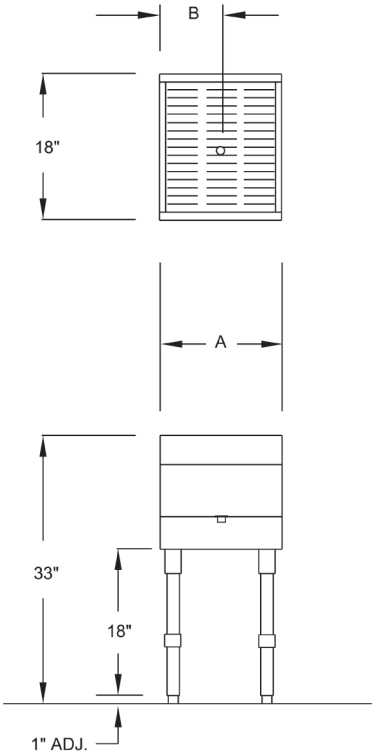

CR-GS Series

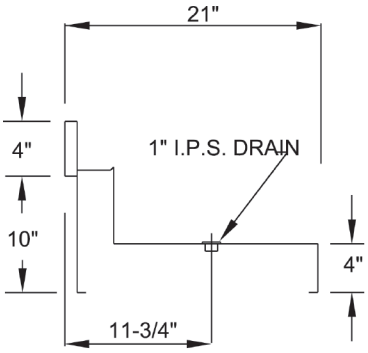

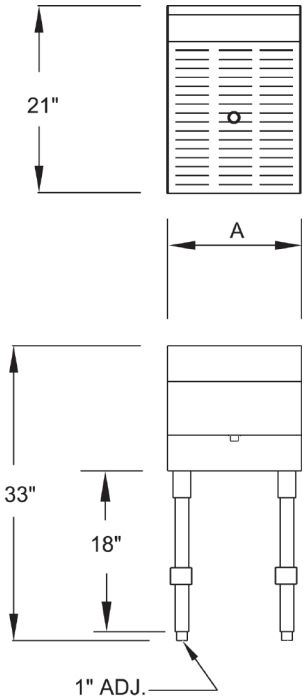

ADVANCE TABCO
SMART FABRICATION™

REF-CC

200 Heartland Boulevard, Edgewood, NY 11717-8380

ADVANCE TABCO is constantly engaged in a program of improving our products. Therefore, we reserve the right to change specifications without prior notice.

© ADVANCE TABCO, SEPTEMBER 2015