Project:

Item Number:

Quantity:

AFFORDABLE PORTABLE™ NON-REFRIGERATED COLD FOOD STATIONS

Affordable Portable™ Cold Food Station Shown with NSF2 Buffet Breath Guard

MODELS

Description	Black	Walnut Woodgrain	Granite	Cherry Woodgrain
3 Pan (46") Cold Food Station Base - 120V				
Solid base	38713	38950	38733	38773
Solid w/lights	3871346	3895046	3873346	3877346
Open Storage	38714	38951	38734	38774
Open Storage w/lights	3871446	3895146	3873446	3877446
Storage w/door	38715	38952	38735	38775
Storage w/door, w/lights	3871546	3895246	3873546	3877546
Cafeteria unit❶	39713	39950	39733	39773
Cafeteria unit w/open storage❶	39714	39951	39734	39774
Cafeteria unit w/storage door❶	39715	39952	39735	39775
4 Pan (60") Cold Food Station Base - 120V				
Solid base	38716	38960	38736	38776
Solid w/lights	3871660	3896060	3873660	3877660
Open Storage	38717	38961	38737	38777
Open Storage w/lights	3871760	3896160	3873760	3877760
Storage w/door	38718	38962	38738	38778
Storage w/door, w/lights	3871860	3896260	3873860	3877860
Cafeteria unit❶	39716	39959	39736	39776
Cafeteria unit w/open storage❶	39717	39961	39737	39777
Cafeteria unit w/storage door❶	39718	39962	39738	39778

❶ Includes Cafeteria breath guard with acrylic panel.

DESCRIPTION & FEATURES

- Vollrath Affordable Portable™ cold stations are constructed of vinyl-clad, 20-gauge carbon steel.
- Foamed-in-place polyurethane foam insulation.
- 1 (2.54 cm) drain makes clean-up easy.
- NSF2 certified Cafeteria or Buffet style acrylic breath guard.
- The non-refrigerated cold stations are available in four versatile colors: granite, walnut woodgrain, black and cherry woodgrain.
- Seamless one-piece 20 gauge 300 series stainless steel work surfaces.
- Locking casters included.
- **Affordable Portable™ orders cannot be canceled or returned.**

Lighting Option

- Factory-installed option
- Requires Buffet breath guard
- 120V
- Bulbs not included

ELECTRICAL PLUG SPECIFICATIONS

Description	With Incandescent Lamps (250W maximum per fixture) Volts	Hz	Amps	Electrical Service (A)	Plug
46" Utility Station	120	60	6.0	15	5-15P
60" Utility Station			8.0		5-15P

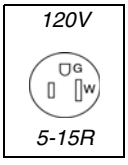

AGENCY CERTIFICATIONS

c UL us LISTED NSF

WARRANTY: All models shown come with Vollrath's standard warranty against defects in materials and workmanship. For full warranty details, please refer to the Vollrath Equipment and Smallwares Catalog.

Approvals	Date

Due to continued product improvement, please consult www.vollrathco.com for current product specifications.

Setting the Standard™

www.vollrathco.com

The Vollrath Company, L.L.C.
1236 North 18th Street
Sheboygan, WI 53081-3201 U.S.A.
Customer Service: 800.628.0830
Canada Customer Service: 800.695.8560
Main Fax: 800.752.5620 or 920.459.6573

Technical Services: 800.628.0832
Technical Services Fax: 920.459.6573

AFFORDABLE PORTABLE™ NON-REFRIGERATED COLD FOOD STATIONS

ACCESSORIES AND ADD-ONS

Cashier Station

- Stable stainless steel work surface
- Wide enough for most registers or terminals
- Open base and bottom shelf for storage
- Cash drawer not available

Dimensions (LxDxH) Inches (CM)	Black	Walnut Woodgrain	Granite	Cherry Woodgrain
24 x 24 x 35 (60.9 x 89)	38700	38905	38720	38760

Tray Slides

- 300 Series stainless steel
- Fold-down mounting brackets
- Adds 5½" (14 cm) to depth in folded position

Item	Description	Depth	Tray Area	Case Lot
39924*	Fits 24" (61 cm) Affordable Portable™	11½" (29.2)	11" (27.9)	1
39946*	Fits 46" (117 cm) Affordable Portable™			1
39960*	Fits 60" (152 cm) Affordable Portable™			1

*Add NF in front of the item number for non-folding model

Cutting Boards

- Polyethylene
- Fold-down mounting brackets
- Adds 4" (10.2 cm) to depth in folded position

Item	Description	Depth	Case Lot
39824*	Fits 24" (61 cm) Affordable Portable™	7" (17.8 cm)	1
39846*	Fits 46" (117 cm) Affordable Portable™		1
39860*	Fits 60" (152 cm) Affordable Portable™		1

*Add NF in front of the item number for non-folding model

Plate Rests

- Stainless steel
- Fold-down mounting kit
- Adds 4½" (11.4 cm) to depth in folded position

Item	Description	Depth	Case Lot
38992*	Fits 24" (61 cm) Affordable Portable™	7" (17.8 cm)	1
38993*	Fits 46" (117 cm) Affordable Portable™		1
38994*	Fits 60" (152 cm) Affordable Portable™		1

*Add NF in front of the item number for non-folding model

Spillage Pans

99780

- Accepts standard size pans
- Use with adaptor plates or insets
- Suitable for bulk storage

Item	Description	Case Lot
99765	Standard edge stainless spillage pan	1
99780	Dripless stainless spillage pan	1
99785	Aluminum spillage pan	1

DIMENSIONS

3 Pan Non-Refrigerated Cold Station with Cafeteria Breath Guard

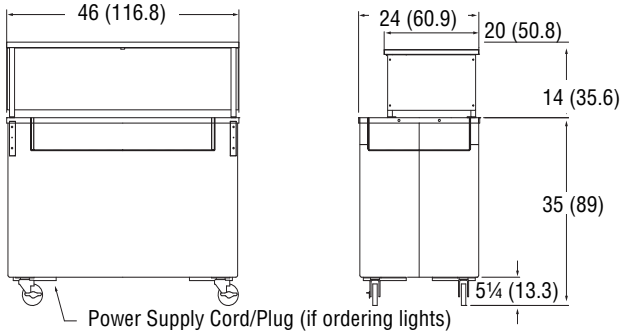

4 Pan Non-Refrigerated Cold Station with Cafeteria Breath Guard

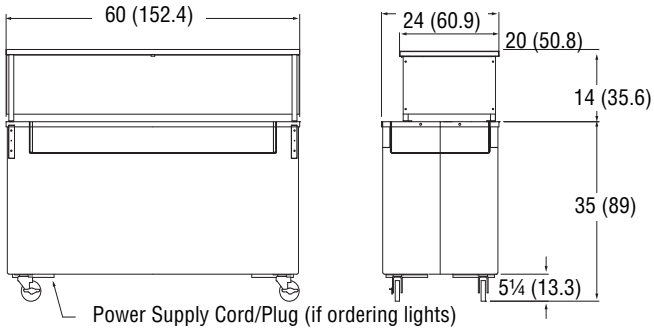

3 Pan Non-Refrigerated Cold Station with Buffet Breath Guard

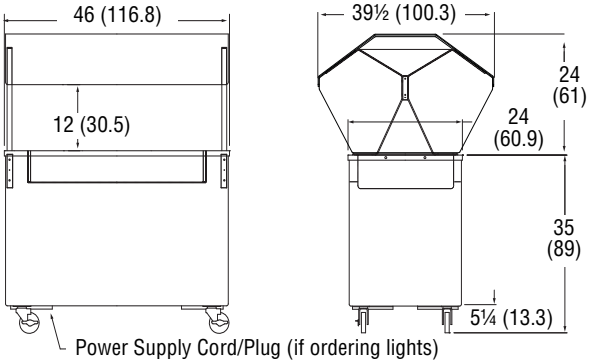

3 Well Storage Opening: 36 x 23 x 16½ (91.5 x 58 x 42)

4 Pan Non-Refrigerated Cold Station with Buffet Breath Guard

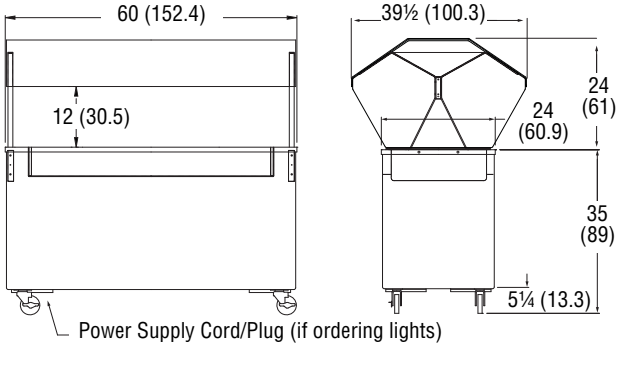

4 Well Storage Opening: 50 x 23 x 16½ (127 x 58 x 42)

VOLLRATH® Setting the Standard™

www.vollrathco.com

The Vollrath Company, L.L.C.
1236 North 18th Street
Sheboygan, WI 53081-3201 U.S.A.
Customer Service: 800.628.0830
Canada Customer Service: 800.695.8560
Main Fax: 800.752.5620 or 920.459.6573

Technical Services: 800.628.0832
Technical Services Fax: 920.459.6573

© 2011 The Vollrath Company L.L.C. Form Number L35677 9/11
Printed in USA