Project:

Item Number:

Quantity:

AFFORDABLE PORTABLE™ UTILITY STATIONS

Affordable Portable™ Utility Station Shown with NSF2 Buffet Breath Guard

DESCRIPTION & FEATURES

- Vollrath Affordable Portable™ utility stations are constructed of vinyl-clad, 20-gauge carbon steel.
- NSF2 certified Cafeteria or Buffet style acrylic breath guard.
- The utility stations are available in four versatile colors: granite, walnut woodgrain, black and cherry woodgrain.
- Seamless one-piece 20 gauge 300 series stainless steel work surfaces.
- Locking casters included.
- **Affordable Portable™ orders cannot be canceled or returned.**

Lighting Option

- Factory-installed option
- Requires Buffet breath guard
- 120V
- Bulbs not included

AGENCY CERTIFICATIONS

c UL us LISTED NSF

Due to continued product improvement, please consult www.vollrathco.com for current product specifications.

MODELS

Description	Black	Walnut Woodgrain	Granite	Cherry Woodgrain
46" Utility Station - 120V				
Solid base	38701	38926	38721	38761
Solid w/lights	3870146	3892646	3872146	3876146
Open Storage	38702	38927	38722	38762
Open Storage w/lights	3870246	3892746	3872246	3876246
Storage w/door	38703	38928	38723	38763
Storage w/door, w/lights	3870346	3892846	3872346	3876346
Cafeteria unit❶	39701	39926	39721	39761
Cafeteria unit w/open storage❶	39702	39927	39722	39762
Cafeteria unit w/storage door❶	39703	39928	39723	39763
60" Utility Station - 120V				
Solid base	38704	38930	38724	38764
Solid w/lights	3870460	3893060	3872460	3876460
Open Storage	38705	38931	38725	38765
Open Storage w/lights	3870560	3893160	3872560	3876560
Storage w/door	38706	38932	38726	38766
Storage w/door, w/lights	3870660	3893260	3872660	3876660
Cafeteria unit❶	39704	39930	39724	39764
Cafeteria unit w/open storage❶	39705	39931	39725	39765
Cafeteria unit w/storage door❶	39706	39932	39726	39766

❶ Includes Cafeteria breath guard with acrylic panel.

ELECTRICAL PLUG SPECIFICATIONS

Description	With Incandescent Lamps (250W maximum per fixture)				
	Volts	Hz	Amps	Electrical Service (A)	Plug
46" Utility Station	120	60	6.0	15	5-15P
60" Utility Station			8.0		5-15P

120V

5-15R

WARRANTY: All models shown come with Vollrath's standard warranty against defects in materials and workmanship. For full warranty details, please refer to the Vollrath Equipment and Smallwares Catalog.

Approvals	Date

Affordable Portable™ Utility Stations

The Vollrath Company, L.L.C.

Setting the Standard™

www.vollrathco.com

The Vollrath Company, L.L.C.
1236 North 18th Street
Sheboygan, WI 53081-3201 U.S.A.
Customer Service: 800.628.0830
Canada Customer Service: 800.695.8560
Main Fax: 800.752.5620 or 920.459.6573

Technical Services: 800.628.0832
Technical Services Fax: 920.459.6573

AFFORDABLE PORTABLE™ UTILITY STATIONS

ACCESSORIES AND ADD-ONS

Cashier Station

- Stable stainless steel work surface
- Wide enough for most registers or terminals
- Open base and bottom shelf for storage
- Cash drawer not available

Dimensions (LxDxH) Inches (CM)	Black	Walnut Woodgrain	Granite	Cherry Woodgrain
24 x 24 x 35 (60.9 x 89)	38700	38905	38720	38760

Tray Slides

- 300 Series stainless steel
- Fold-down mounting brackets
- Adds 5½" (14 cm) to depth in folded position

Item	Description	Overall Depth	Tray Area	Case Lot
39924*	Fits 24" (61 cm) Affordable Portable™	11½" (29.2)	11" (27.9)	1
39946*	Fits 46" (117 cm) Affordable Portable™			1
39960*	Fits 60" (152 cm) Affordable Portable™			1

*Add NF in front of the item number for non-folding model

Cutting Boards

- Polyethylene
- Fold-down mounting brackets
- Add 4" (10.2 cm) to depth in folded position

Item	Description	Depth	Case Lot
39824*	Fits 24" (61 cm) Affordable Portable™	7" (17.8 cm)	1
39846*	Fits 46" (117 cm) Affordable Portable™		1
39860*	Fits 60" (152 cm) Affordable Portable™		1

*Add NF in front of the item number for non-folding model

Plate Rests

- Stainless steel
- Fold-down mounting brackets
- Adds 4½" (11.4 cm) to depth in folded position

Item	Description	Depth	Case Lot
38992*	Fits 24" (61 cm) Affordable Portable™	7" (17.8 cm)	1
38993*	Fits 46" (117 cm) Affordable Portable™		1
38994*	Fits 60" (152 cm) Affordable Portable™		1

*Add NF in front of the item number for non-folding model

Infrared Lamp Bulbs

Item	Description	Case Lot
72242	White, 250W	1 Dozen
72241	Red, 250W	1 Dozen

DIMENSIONS

46" Utility Station with Cafeteria Breath Guard

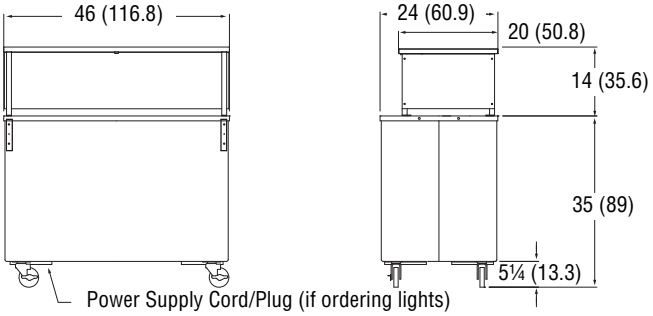

60" Utility Station with Cafeteria Breath Guard

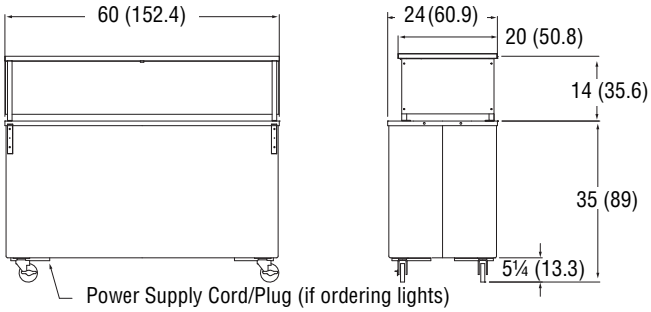

46" Utility Station with Buffet Breath Guard

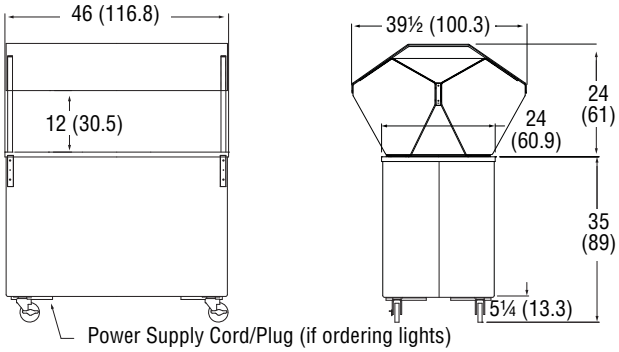

60" Utility Station with Buffet Breath Guard

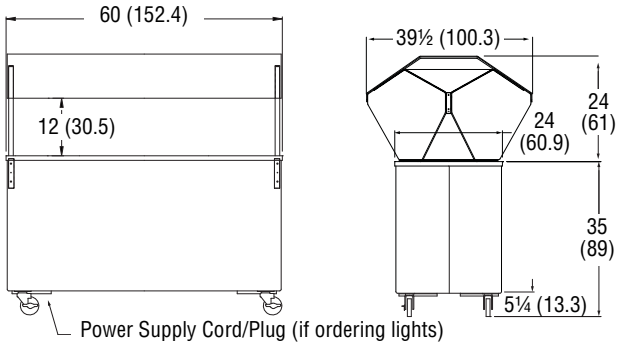

3 Well Storage Opening: 36 x 23 x 16½ (91.5 x 58 x 42)

4 Well Storage Opening: 50 x 23 x 16½ (127 x 58 x 42)

The Vollrath Company, L.L.C.
1236 North 18th Street
Sheboygan, WI 53081-3201 U.S.A.
Customer Service: 800.628.0830
Canada Customer Service: 800.695.8560
Main Fax: 800.752.5620 or 920.459.6573

Technical Services: 800.628.0832
Technical Services Fax: 920.459.6573

www.vollrathco.com

© 2011 The Vollrath Company L.L.C. Form Number L35678 9/11
Printed in USA