**Project:**

**Item Number:**

**Quantity:**

# AFFORDABLE PORTABLE™ – DELUXE HOT FOOD STATIONS

*Affordable Portable™ Deluxe Hot Food Station Shown with NSF2 Buffet Breath Guard*

## DESCRIPTION & FEATURES

- Vollrath Affordable Portable™ hot food stations are constructed of vinyl-clad, 20-gauge carbon steel.
- Thermoset wells with high-efficiency 480W in-water heating element.
- Sealed well - no spillage pans required.
- Manifold drains.
- NSF2 certified Cafeteria or Buffet style acrylic breath guard.
- The hot food stations are available in four versatile colors: granite, walnut woodgrain, black and cherry woodgrain.
- 20 gauge 300 series stainless steel work surfaces.
- Two locking casters included.
- Dial controls.
- 8 ft. power cord.
- **Affordable Portable™ orders cannot be canceled or returned.**

**Lighting Option**

- Factory-installed option
- Requires Buffet breath guard
- 120V
- Bulbs not included

## AGENCY CERTIFICATIONS

c UL us LISTED

NSF

**WARRANTY:** All models shown come with Vollrath's standard warranty against defects in materials and workmanship. For full warranty details, please refer to the Vollrath Equipment and Smallwares Catalog.

*Due to continued product improvement, please consult www.vollrathco.com for current product specifications.*

## MODELS

| Description | Black | Walnut Woodgrain | Granite | Cherry Woodgrain |
|---|---|---|---|---|
| **3 Well Hot Food Station – 120V** | | | | |
| Solid base❶ | T38707 | T38935 | T38727 | T38767 |
| Solid w/lights❷ | T3870746 | T3893546 | T3872746 | T3876746 |
| Open Storage❶ | T38708 | T38936 | T38728 | T38768 |
| Open Storage w/lights❷ | T3870846 | T3893646 | T3872846 | T3876846 |
| Storage w/door❶ | T38709 | T38937 | T38729 | T38769 |
| Storage w/door, w/lights❷ | T3870946 | T3893746 | T3872946 | T3876946 |
| Cafeteria unit❶❸ | T39707 | T39935 | T39727 | T39767 |
| Cafeteria unit w/open storage❶❸ | T39708 | T39936 | T39728 | T39768 |
| Cafeteria unit w/storage door❶❸ | T39909 | T39937 | T39729 | T39769 |
| **4 Well Hot Foot Station – 120V** | | | | |
| Solid base❶ | T38710 | T38945 | T38730 | T38770 |
| Solid w/lights❷ | T3871060 | T3894560 | T3873060 | T3877060 |
| Open Storage❶ | T38711 | T38946 | T38731 | T38771 |
| Open Storage w/lights❷ | T3871160 | T3894660 | T3873160 | T3877160 |
| Storage w/door❶ | T38712 | T38947 | T38732 | T38772 |
| Storage w/door, w/lights❷ | T3871260 | T3894760 | T3873260 | T3877260 |
| Cafeteria unit❶❸ | T39710 | T39945 | T39730 | T39770 |
| Cafeteria unit w/open storage❶❸ | T39711 | T39948 | T39731 | T39771 |
| Cafeteria unit w/storage door❶❸ | T39712 | T39947 | T39732 | T39772 |

❶ For 208-240V without lights, add 2 to the model number.
❷ For 120/208 and 120/240V with lights, add 4 to the model number.
❸ Includes Cafeteria breath guard.

## ELECTRICAL SPECIFICATIONS

| Description | Volts | Hz | Amps | Watts per Well | Electrical Service Amps | Plug |
|---|---|---|---|---|---|---|
| 3 Well | 120 | 60 | 12 | 480 | 15 | 5-15P |
| 4 Well | | | 16 | | 20 | 5-20P |
| 3 Well | 208-240 | | 8.7-10 | 600-800 | 15 | 6-15P |
| 4 Well | | | 11.5-13.3 | | 20 | 6-20P |
| 3 Well with Lights* | 120 | | 18.3 | 480 | 30 | 5-30P |
| 4 Well with Lights* | | | 24.3 | | 50 | 5-50P |
| 3 Well with Lights* | 120/208-240 | | 12.9-14.2 | 600-800 | 20 | 14-20P |
| 4 Well with Lights* | | | 15-16.3 | | 30 | 14-30P |

* Incandescent lamps (250W maximum per fixture)

## RECEPTACLE CONFIGURATIONS

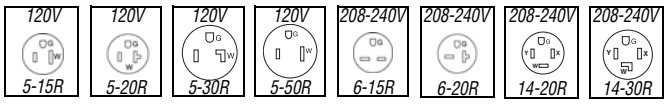


| Approvals | Date |
|---|---|
| | |


VOLLRATH Setting the Standard™

www.vollrathco.com

The Vollrath Company, L.L.C.
1236 North 18th Street
Sheboygan, WI 53081-3201 U.S.A.
Customer Service: 800.628.0830
Canada Customer Service: 800.695.8560
Main Fax: 800.752.5620 or 920.459.6573

Technical Services: 800.628.0832
Technical Services Fax: 920.459.6573

# AFFORDABLE PORTABLE™ – DELUXE HOT FOOD STATIONS

## ACCESSORIES AND ADD-ONS

### Cashier Station

- Stable stainless steel work surface
- Wide enough for most registers or terminals
- Open base and bottom shelf for storage
- Cash drawer not available

| Dimensions (LxDxH) Inches (CM) | Black | Walnut Woodgrain | Granite | Cherry Woodgrain |
|---|---|---|---|---|
| 24 x 24 x 35 (60.9 x 89) | 38700 | 38905 | 38720 | 38760 |

### Tray Slides

- 300 Series stainless steel
- Fold-down mounting brackets
- Adds 5½" (14 cm) to depth in folded position

| Item | Description | Overall Depth | Tray Area | Case Lot |
|---|---|---|---|---|
| 39924* | Fits 24" (61 cm) Affordable Portable™ | 11½" (29.2) | 11" (27.9) | 1 |
| 39946* | Fits 46" (117 cm) Affordable Portable™ | | | 1 |
| 39960* | Fits 60" (152 cm) Affordable Portable™ | | | 1 |

*Add NF in front of the item number for non-folding model

### Cutting Boards

- Polyethylene
- Fold-down mounting brackets
- Add 4" (10.2 cm) to depth in folded position

| Item | Description | Depth | Case Lot |
|---|---|---|---|
| 39824* | Fits 24" (61 cm) Affordable Portable™ | 7" (17.8 cm) | 1 |
| 39846* | Fits 46" (117 cm) Affordable Portable™ | | 1 |
| 39860* | Fits 60" (152 cm) Affordable Portable™ | | 1 |

*Add NF in front of the item number for non-folding model

### Plate Rests

- Stainless steel
- Fold-down mounting brackets
- Adds 4½" (11.4 cm) to depth in folded position

| Item | Description | Depth | Case Lot |
|---|---|---|---|
| 38992* | Fits 24" (61 cm) Affordable Portable™ | 7" (17.8 cm) | 1 |
| 38993* | Fits 46" (117 cm) Affordable Portable™ | | 1 |
| 38994* | Fits 60" (152 cm) Affordable Portable™ | | 1 |

*Add NF in front of the item number for non-folding model

### Infrared Lamp Bulbs

| Item | Description | Case Lot |
|---|---|---|
| 72242 | White, 250W | 1 Dozen |
| 72241 | Red, 250W | 1 Dozen |

## DIMENSIONS

### Deluxe 3 Well Hot Food Station with NSF2 Cafeteria Breath Guard

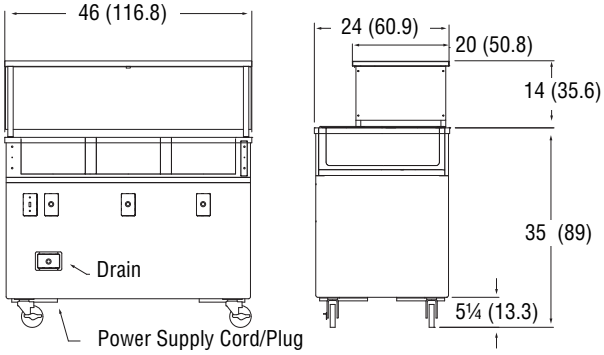


### Deluxe 4 Well Hot Food Station with NSF2 Cafeteria Breath Guard

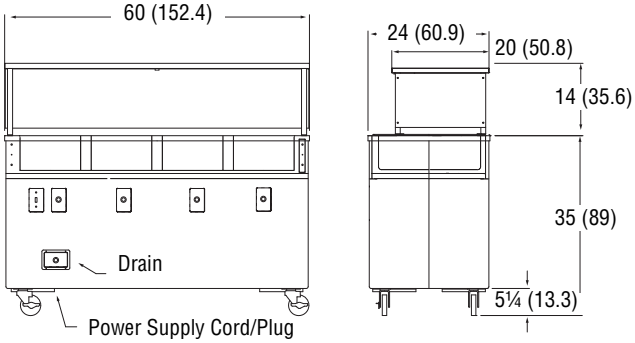


### Deluxe 3 Well Hot Food Station with NSF2 Buffet Breath Guard

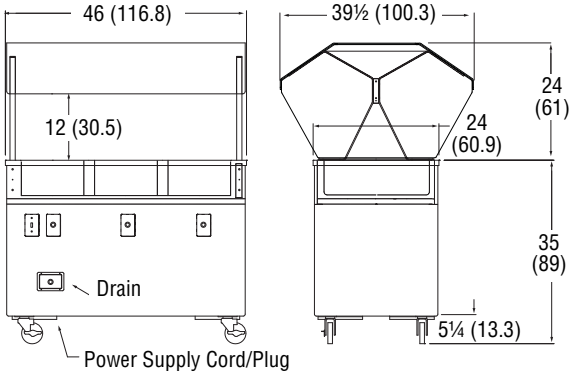


**3 Well Storage Opening:** 36 x 23 x 16½ (91.5 x 58 x 42)

### Deluxe 4 Well Hot Food Station with NSF2 Buffet Breath Guard

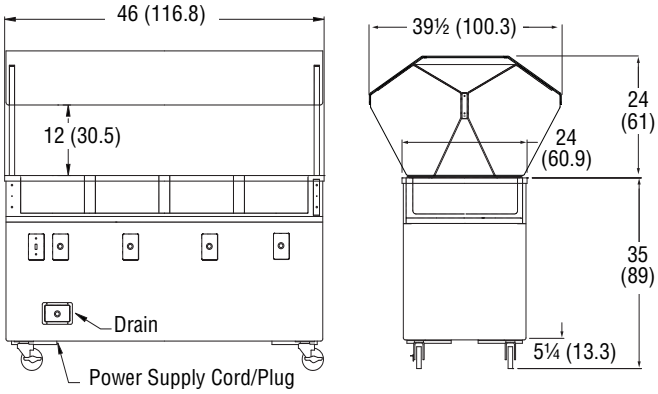


**4 Well Storage Opening:** 50 x 23 x 16½ (127 x 58 x 42)

The Vollrath Company, L.L.C.
1236 North 18th Street
Sheboygan, WI 53081-3201 U.S.A.
Customer Service: 800.628.0830
Canada Customer Service: 800.695.8560
Main Fax: 800.752.5620 or 920.459.6573

Technical Services: 800.628.0832
Technical Services Fax: 920.459.6573

www.vollrathco.com

© 2012 The Vollrath Company L.L.C.
Form Number L35754 5/12
Printed in USA