Project:

Item Number:

Quantity:

AFFORDABLE PORTABLE™ – DELUXE HOT FOOD STATIONS

Affordable Portable™ Deluxe Hot Food Station Shown with NSF2 Buffet Breath Guard

DESCRIPTION & FEATURES

- Vollrath Affordable Portable™ hot food stations are constructed of vinyl-clad, 20-gauge carbon steel.
- Thermoset wells with high-efficiency 480W in-water heating element.
- Sealed well - no spillage pans required.
- Manifold drains.
- NSF2 certified Cafeteria or Buffet style acrylic breath guard.
- The hot food stations are available in four versatile colors: granite, walnut woodgrain, black and cherry woodgrain.
- 20 gauge 300 series stainless steel work surfaces.
- Two locking casters included.
- Dial controls.
- 8 ft. power cord.
- **Affordable Portable™ orders cannot be canceled or returned.**

Lighting Option

- Factory-installed option
- Requires Buffet breath guard
- 120V
- Bulbs not included

AGENCY CERTIFICATIONS

c UL us LISTED

NSF

WARRANTY: All models shown come with Vollrath's standard warranty against defects in materials and workmanship. For full warranty details, please refer to the Vollrath Equipment and Smallwares Catalog.

Due to continued product improvement, please consult www.vollrathco.com for current product specifications.

MODELS

Description	Black	Walnut Woodgrain	Granite	Cherry Woodgrain
3 Well Hot Food Station – 120V				
Solid base❶	T38707	T38935	T38727	T38767
Solid w/lights❷	T3870746	T3893546	T3872746	T3876746
Open Storage❶	T38708	T38936	T38728	T38768
Open Storage w/lights❷	T3870846	T3893646	T3872846	T3876846
Storage w/door❶	T38709	T38937	T38729	T38769
Storage w/door, w/lights❷	T3870946	T3893746	T3872946	T3876946
Cafeteria unit❶❸	T39707	T39935	T39727	T39767
Cafeteria unit w/open storage❶❸	T39708	T39936	T39728	T39768
Cafeteria unit w/storage door❶❸	T39909	T39937	T39729	T39769
4 Well Hot Foot Station – 120V				
Solid base❶	T38710	T38945	T38730	T38770
Solid w/lights❷	T3871060	T3894560	T3873060	T3877060
Open Storage❶	T38711	T38946	T38731	T38771
Open Storage w/lights❷	T3871160	T3894660	T3873160	T3877160
Storage w/door❶	T38712	T38947	T38732	T38772
Storage w/door, w/lights❷	T3871260	T3894760	T3873260	T3877260
Cafeteria unit❶❸	T39710	T39945	T39730	T39770
Cafeteria unit w/open storage❶❸	T39711	T39948	T39731	T39771
Cafeteria unit w/storage door❶❸	T39712	T39947	T39732	T39772

❶ For 208-240V without lights, add 2 to the model number.
❷ For 120/208 and 120/240V with lights, add 4 to the model number.
❸ Includes Cafeteria breath guard.

ELECTRICAL SPECIFICATIONS

Description	Volts	Hz	Amps	Watts per Well	Electrical Service Amps	Plug
3 Well	120	60	12	480	15	5-15P
4 Well			16		20	5-20P
3 Well	208-240		8.7-10	600-800	15	6-15P
4 Well			11.5-13.3		20	6-20P
3 Well with Lights*	120		18.3	480	30	5-30P
4 Well with Lights*			24.3		50	5-50P
3 Well with Lights*	120/208-240		12.9-14.2	600-800	20	14-20P
4 Well with Lights*			15-16.3		30	14-30P

* Incandescent lamps (250W maximum per fixture)

RECEPTACLE CONFIGURATIONS

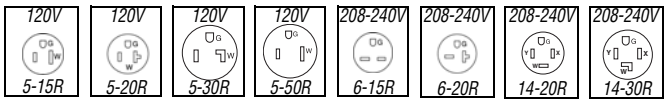

Approvals	Date

VOLLRATH Setting the Standard™

www.vollrathco.com

The Vollrath Company, L.L.C.
1236 North 18th Street
Sheboygan, WI 53081-3201 U.S.A.
Customer Service: 800.628.0830
Canada Customer Service: 800.695.8560
Main Fax: 800.752.5620 or 920.459.6573

Technical Services: 800.628.0832
Technical Services Fax: 920.459.6573

AFFORDABLE PORTABLE™ – DELUXE HOT FOOD STATIONS

ACCESSORIES AND ADD-ONS

Cashier Station

- Stable stainless steel work surface
- Wide enough for most registers or terminals
- Open base and bottom shelf for storage
- Cash drawer not available

Dimensions (LxDxH) Inches (CM)	Black	Walnut Woodgrain	Granite	Cherry Woodgrain
24 x 24 x 35 (60.9 x 89)	38700	38905	38720	38760

Tray Slides

- 300 Series stainless steel
- Fold-down mounting brackets
- Adds 5½" (14 cm) to depth in folded position

Item	Description	Overall Depth	Tray Area	Case Lot
39924*	Fits 24" (61 cm) Affordable Portable™	11½" (29.2)	11" (27.9)	1
39946*	Fits 46" (117 cm) Affordable Portable™			1
39960*	Fits 60" (152 cm) Affordable Portable™			1

*Add NF in front of the item number for non-folding model

Cutting Boards

- Polyethylene
- Fold-down mounting brackets
- Add 4" (10.2 cm) to depth in folded position

Item	Description	Depth	Case Lot
39824*	Fits 24" (61 cm) Affordable Portable™	7" (17.8 cm)	1
39846*	Fits 46" (117 cm) Affordable Portable™		1
39860*	Fits 60" (152 cm) Affordable Portable™		1

*Add NF in front of the item number for non-folding model

Plate Rests

- Stainless steel
- Fold-down mounting brackets
- Adds 4½" (11.4 cm) to depth in folded position

Item	Description	Depth	Case Lot
38992*	Fits 24" (61 cm) Affordable Portable™	7" (17.8 cm)	1
38993*	Fits 46" (117 cm) Affordable Portable™		1
38994*	Fits 60" (152 cm) Affordable Portable™		1

*Add NF in front of the item number for non-folding model

Infrared Lamp Bulbs

Item	Description	Case Lot
72242	White, 250W	1 Dozen
72241	Red, 250W	1 Dozen

DIMENSIONS

Deluxe 3 Well Hot Food Station with NSF2 Cafeteria Breath Guard

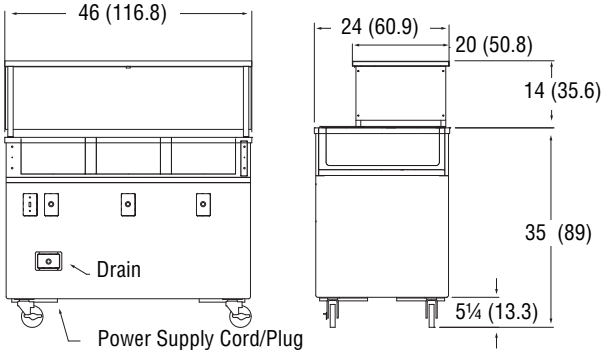

Deluxe 4 Well Hot Food Station with NSF2 Cafeteria Breath Guard

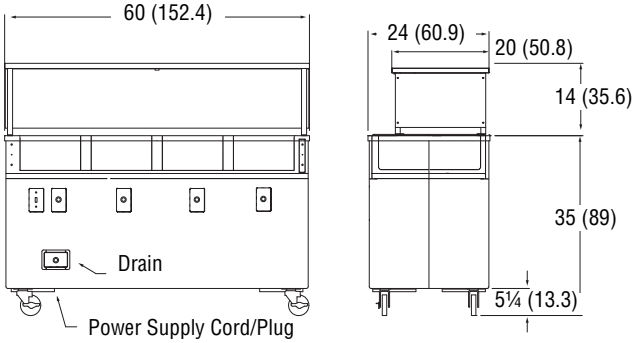

Deluxe 3 Well Hot Food Station with NSF2 Buffet Breath Guard

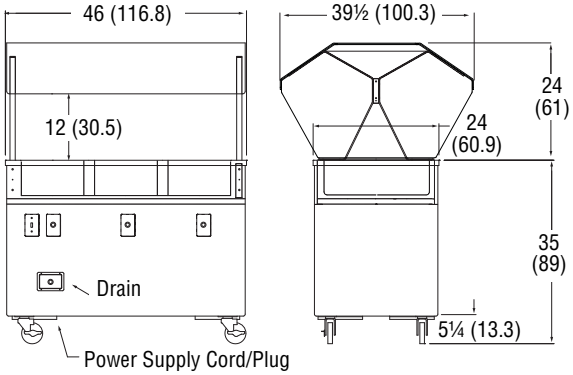

3 Well Storage Opening: 36 x 23 x 16½ (91.5 x 58 x 42)

Deluxe 4 Well Hot Food Station with NSF2 Buffet Breath Guard

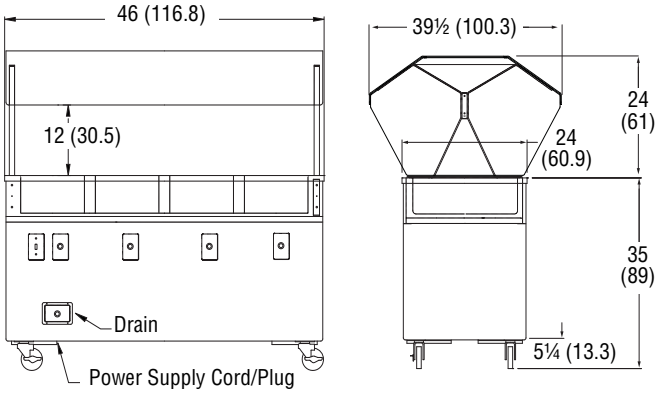

4 Well Storage Opening: 50 x 23 x 16½ (127 x 58 x 42)

The Vollrath Company, L.L.C.
1236 North 18th Street
Sheboygan, WI 53081-3201 U.S.A.
Customer Service: 800.628.0830
Canada Customer Service: 800.695.8560
Main Fax: 800.752.5620 or 920.459.6573

Technical Services: 800.628.0832
Technical Services Fax: 920.459.6573

www.vollrathco.com

© 2012 The Vollrath Company L.L.C.
Form Number L35754 5/12
Printed in USA