SPECIFICATION SHEET

Item No.: _____ Qty.:____
Model No.: _____
Project No.:_____

Standard Series Work Table

Standard Work Table, Flat Top with Stainless Steel Crossbracing

24"	30"
❑ WT24X30-STSX	❑ WT30X30-STSX
❑ WT24X36-STSX	❑ WT30X36-STSX
❑ WT24X48-STSX	❑ WT30X48-STSX
❑ WT24X60-STSX	❑ WT30X60-STSX
❑ WT24X72-STSX	❑ WT30X72-STSX
❑ WT24X84-STSX	❑ WT30X84-STSX
❑ WT24X96-STSX	❑ WT30X96-STSX
❑ WT24X108-STSX	❑ WT30X108-STSX
❑ WT24X120-STSX	❑ WT30X120-STSX

Features

- 16 Gauge, 300 series stainless steel
- Welded construction for consistent metal gauge thickness throughout
- Sound deadened between top and bottom hat channels with double sided tape
- 1-5/8" Stainless steel legs and feet, adjustable up to 1"
- Adjustable stainless steel crossbracing
- Shipped knocked down for reduced shipping costs and supplied with Allen wrench and screw

Options

❑ Custom Height (if less than 36")
❑ Cutout in Top (depending on size and location)
❑ Overshelves
❑ Undershelves
❑ Drawers
❑ Casters / Feet Upgrade

* For additional available options, contact Elkay SSP

Materials

- **Top:** 16 Gauge, 300 series stainless steel, 1-3/4" turned-down edge
- **Legs:** 1-5/8" Diameter heavy gauge stainless steel tubing with stainless steel leg gussets and stainless steel feet adjustable up to 1"
- **Crossbracing:** 1-1/4" Diameter, stainless steel, adjustable

Flyer Product

NSF AUTOQUOTES The KCL CADalog

In keeping with our policy of continuing product improvement, Elkay SSP reserves the right to change product specifications without notice.

This specification describes an Elkay SSP product with design, quality and functional benefits to the user. When making a comparison of other producers' offerings, be certain these features are not overlooked.

Elkay SSP
421 N. Freya St.
Spokane, WA 99205
Phone: 800-726-0553 Fax: 509-535-1493

Website: www.sspinc.net
Email: sspsales@elkay.com
©2011 Elkay

ELKAY SSP, LLC™

Item No.: _____ Qty.:____
Model No.: _____
Project No.:_____

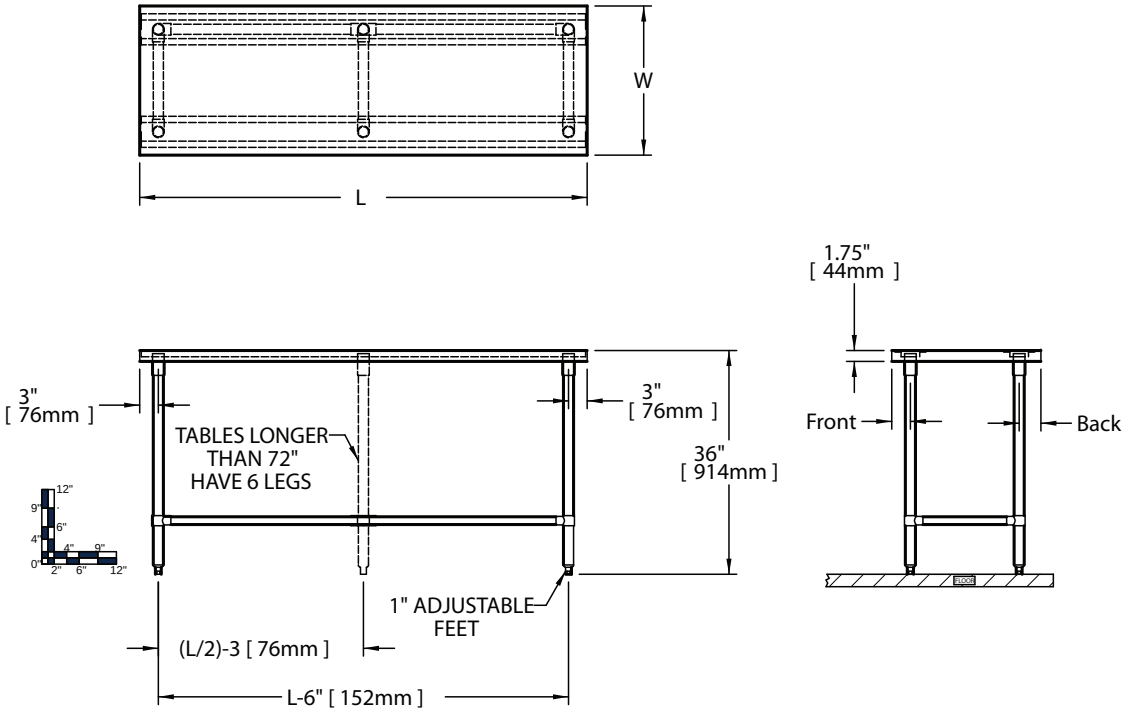

24" Work Table						30" Work Table						
	Overall Size				Weight		Overall Size				Weight	Legs
	Length L		Height H				Length L		Height H			
Model Number	in.	mm	in.	mm	lbs. kg	Model Number	in.	mm	in.	mm	lbs. kg	
WT 24 X 30 - STS X	30	762	36	914	76 35	WT 30 X 30 - STS X	30	762	36	914	86 39	4
WT 24 X 36 - STS X	36	914	36	914	86 39	WT 30 X 36 - STS X	36	914	36	914	95 43	4
WT 24 X 48 - STS X	48	1219	36	914	103 47	WT 30 X 48 - STS X	48	1219	36	914	113 51	4
WT 24 X 60 - STS X	60	1524	36	914	125 57	WT 30 X 60 - STS X	60	1524	36	914	137 62	4
WT 24 X 72 - STS X	72	1829	36	914	143 65	WT 30 X 72 - STS X	72	1829	36	914	156 71	4
WT 24 X 84 - STS X	84	2134	36	914	176 80	WT 30 X 84 - STS X	84	2134	36	914	191 87	6
WT 24 X 96 - STS X	96	2438	36	914	194 88	WT 30 X 96 - STS X	96	2438	36	914	211 96	6
WT 24 X 108 - STS X	108	2743	36	914	220 100	WT 30 X 108 - STS X	108	2743	36	914	238 108	6
WT 24 X 120 - STS X	120	3048	36	914	239 109	WT 30 X 120 - STS X	120	3048	36	914	258 117	6

- Flyer Product
- Flat Top with Stainless Steel Crossbracing
- Overall Length - in.
- Crossbracing
- Overall Width - in
- Standard Series Work Table

Elkay SSP
421 N. Freya St.
Spokane, WA 99205
Phone: 800-726-0553 Fax: 509-535-1493

Website: www.sspinc.net
Email: sspsales@elkay.com
©2011 Elkay