FEDERAL INDUSTRIES
A Standex Company
215 Federal Avenue
Belleville, WI 53508-9201
Phone: 800-356-4206
Fax: 608-424-3234
Email: geninfo@federalind.com
Website: www.federalind.com

The Signature of Quality®

Project Name: _____
Item #: _____
Model #: _____ Qty: _____
Approval: _____

AIA#

SIS#

HIGH VOLUME NON-REFRIGERATED BAKERY CASE

Display more product and serve more customers with presentation and value in mind. Designed for continuous case line-ups without middle end glass.

MODEL	DIMENSIONS (Includes End Panels)
☐ **SGD3642**	36.13 x 35.31 x 42 (in) 918 x 897 x 1067 (mm)
☐ **SGD5042**	50.13 x 35.31 x 42 (in) 1273 x 897 x 1067 (mm)
☐ **SGD5942**	59.13 x 35.31 x 42 (in) 1502 x 897 x 1067 (mm)
☐ **SGD7742**	77.13 x 35.31 x 42 (in) 1959 x 897 x 1067 (mm)
☐ **SGD3148**	31.13 x 35.31 x 48 (in) 791 x 897 x 1219 (mm)
☐ **SGD3648**	36.13 x 35.31 x 48 (in) 918 x 897 x 1219 (mm)
☐ **SGD5048**	50.13 x 35.31 x 48 (in) 1273 x 897 x 1219 (mm)
☐ **SGD5948**	59.13 x 35.31 x 48 (in) 1502 x 897 x 1219 (mm)
☐ **SGD7748**	77.13 x 35.31 x 48 (in) 1959 x 897 x 1219 (mm)

STANDARD FEATURES

Model Features

- Tempered tilt-out front glass for easy cleaning. Front glass is sloped for high visual product display.
- Tempered glass top, ends, and doors.
- Removable sliding rear doors, shelf lights, shelf supports, and shelves.
- 31" and 36" have two swing doors.
- Steel base construction with a choice of six standard laminates on base. Other finishes optional.
- Scratch-resistant, corrosion-proof white vented display deck.
- Designed for continuous line-ups.
- Black trim.
- Adjustable Leg Levelers

Shelving

- Adjustable white wire shelves. Shelves are adjustable up and down and can also be tilted in three positions. 48" models have three tiers of shelves; 42" models have two tiers of shelves.

Lighting

- LED top light and shelf lights.

Agency Approvals

- UL Safety and UL Sanitation listed
- DOE 2017 Compliant.

OPTIONAL ACCESSORIES

- ☐ Special Base Finish
- ☐ Glass Shelves
- ☐ Rear Wrapping Board
- ☐ Cord & Plug
- ☐ Fan Kit
- ☐ Black, Gold, or Chrome Wire Shelves
- ☐ Reflective Ends
- ☐ White or Mirrored Interior Ends with Laminated Exterior
- ☐ Reflective Rear Doors
- ☐ Casters/Cord & Plug Included
- ☐ Legs
- ☐ Top Cutting Board, White
- ☐ Package Shelf
- ☐ Light Below Package Shelf
- ☐ Front Glass and Rear Door Locks
- ☐ Joining Kit for Continuous Line-ups

Made in America

DOE 2017 Energy Efficiency Compliant

c UL us

CLASSIFIED UL EPH ANSI/NSF 2

WARRANTY*
One year Parts and Labor
2nd thru 5th year part only service compressor
(U.S.A and Canada)

Note: Information is subject to change at any time.
Visit www.federalind.com for the most current specs.

Revised 02/18/2020

AIA#	HIGH VOLUME NON-REFRIGERATED BAKERY CASE
SIS#	Product Specifications

DIMENSION: xx"/(mm)

DIMENSION TOLERANCE +/- 0.25 (6.4)

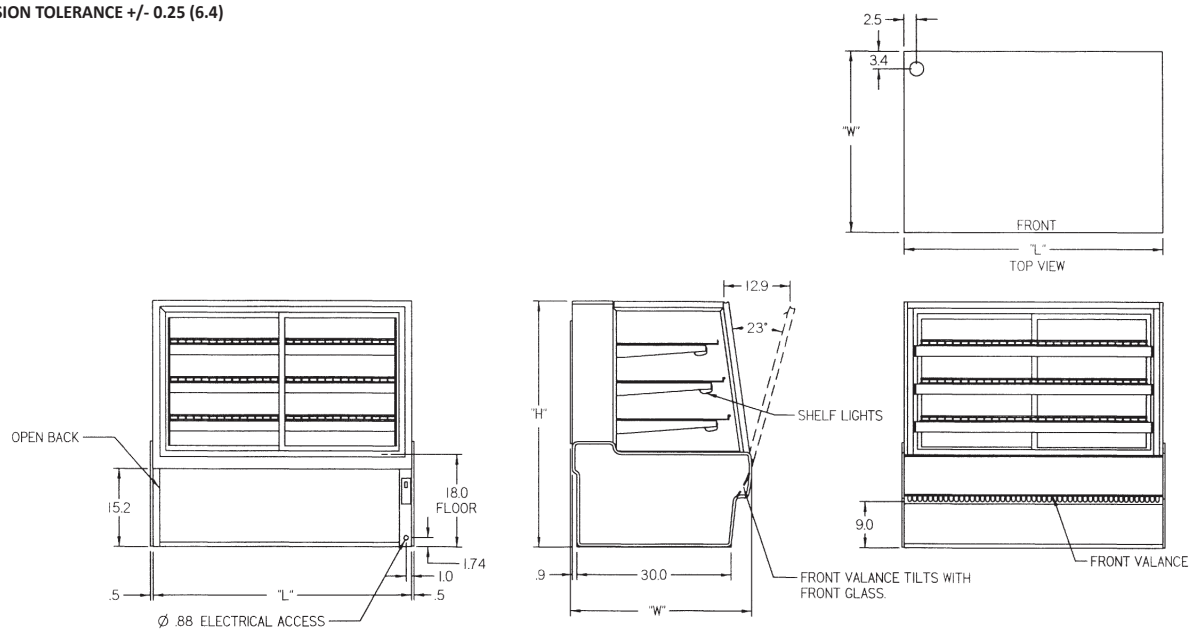

MODEL	DIMENSIONS				SHIPPING WHT		CAPACITY (BAKERY PAN)	ELECTRICAL 120/60/1
	L	D	H1	UNITS	LBS	KILO		
SGD3148	31.13	35.31	48	in.	270	122	4 (18" X 26") & 4 (9" X 26")	1.5 AMPS
	791	897	1219	mm.				
SGD3642	36.13	35.31	42	in.	385	175	3 (18"X 26") & 3 (9" X 26")	1.5 AMPS
	918	897	1067	mm.				
SGD3648	36.13	35.31	48	in.	400	181	4 (18" X 26") & 4 (9" X 26")	1.5 AMPS
	918	897	1219	mm.				
SGD5042	50.13	35.31	42	in.	425	193	6 (18" X 26") & 3 (9" X 26")	1.5 AMPS
	1273	897	1067	mm.				
SGD5048	50.13	35.31	48	in.	480	218	8 (18" X 26") & 4 (9" X 26")	1.5 AMPS
	1273	897	1219	mm.				
SGD5942	59.13	35.31	42	in.	505	229	9 (18" X 26")	1.5 AMPS
	1502	897	1067	mm.				
SGD5948	59.13	35.31	48	in.	535	243	12 (18" X 26")	1.5 AMPS
	1502	897	1219	mm.				
SGD7742	77.13	35.31	42	in.	685	311	12 (18" X 26")	1.5 AMPS
	1959	897	1067	mm.				
SGD7748	77.13	35.31	48	in.	715	324	16 (18" X 26")	1.5 AMPS
	1959	897	1219	mm.				

- If a GFCI circuit is required, a GFCI Breaker MUST be used instead of GFCI receptacle.
- Due to continuing engineering improvements, specifications are subject to change without notice.

DOE 2017
Energy Efficiency
Compliant

ANSI/NSF 2

The Signature of Quality®

FEDERAL INDUSTRIES
A Standex Company
215 Federal Avenue Belleville, Wisconsin 53508-9201

Phone: 800-356-4206
Fax: 608-424-3234
Email: Geninfo@Federalind.com
Website: Federalind.com