Project _____

AIA # _____ SIS # _____

Item # _____ Quantity _____ C.S.I. Section 114000

COMMERCIAL REFRIGERATION

TRAULSEN MILK COOLERS

RMC SERIES

MILK COOLER

12 CRATE CAPACITY MODELS

Model Shown - RMC49D4

STANDARD PRODUCT FEATURES

- Stainless Steel Exterior & Interior
- Top Mounted Removable Refrigeration System
- Forced Air Refrigeration System
- Accommodates (12) 13" x 13" Crate(s) or (6) 13" x 19" Crate(s)
- Single or Double Sided
- Sliding Lift Up & Down Door(s)
- Reinforced Cabinet Exterior Bottom
- Heavy Duty Dunnage Racks Protect Cabinet & Promote Airflow
- Lockable Insulated Doors
- Metal Door Handles
- Magnetic Snap-In EZ- Clean Door Gasket(s)
- Floor Drain with Plug
- 8' Cord & Plug Attached
- Set of Four (4) 6" or 4" Factory Mounted Adjustable Casters
- 3-Year Parts & Labor Warranty
- 2-Year Additional Compressor Parts Warranty

Intertek 4004142 Conforms to UL STD. 471 Cert. to CAN/CSA STD. C22.2 NO.120

CERTIFIED TO ANSI/NSF 7

3-YEAR PARTS & LABOR WARRANTY

This unit is listed to the applicable UL, CSA and NSF Standards by an approved NRTL. Consult the factory or unit's data plate for approval information.

ACCESSORIES & OPTIONS (*field installed)

- MCACC-BUMPER, Bumper Corner Guard Kit (4)

AVAILABLE CONFIGURATIONS

Single Access Models

RMC49S4	12 Crate 49" Length, 4" Casters
RMC49S6	12 Crate 49" Length, 6" Casters

Double Access Models

RMC49D4	12 Crate 49" Length, 4" Casters
RMC49D6	12 Crate 49" Length, 6" Casters

CONTINUED PRODUCT DEVELOPMENT MAY NECESSITATE SPECIFICATION CHANGES WITHOUT NOTICE.

Approved by_____ Date_____ Approved by_____ Date_____

MODELS

Single Access Models: RMC49S4,RMC49S6
Double Access Models: RMC49D4, RMC49D6

CLICK
TRANSFER
For KCL CADalog Website

Single Access Models

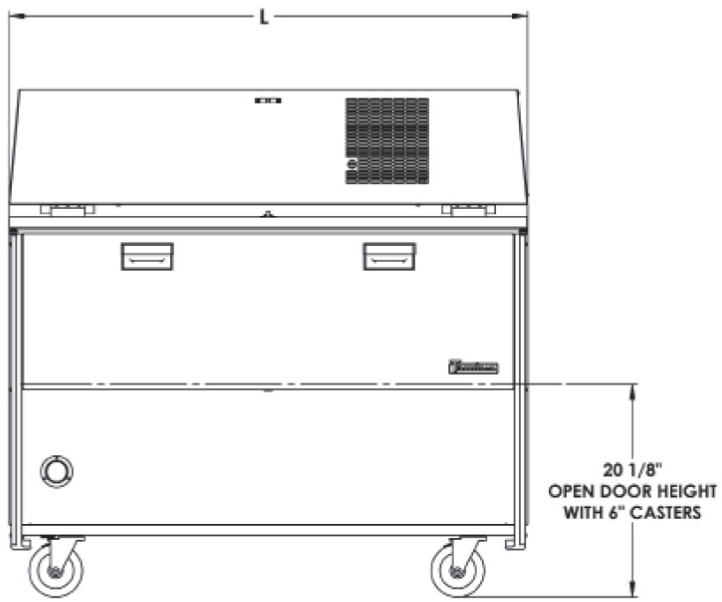

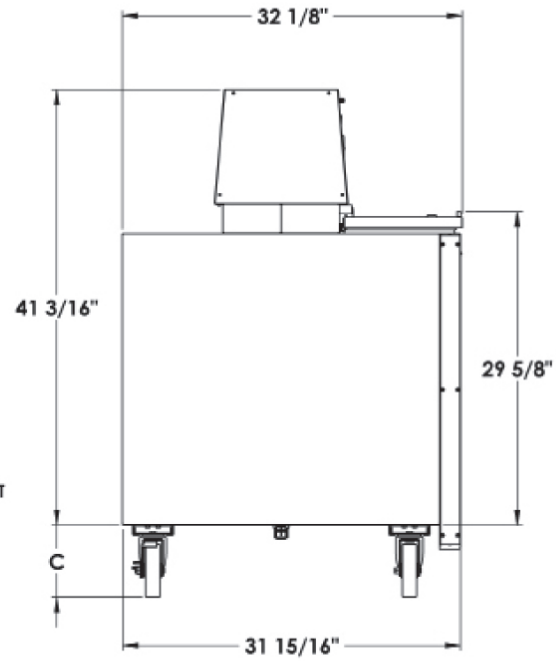

Double Access Models

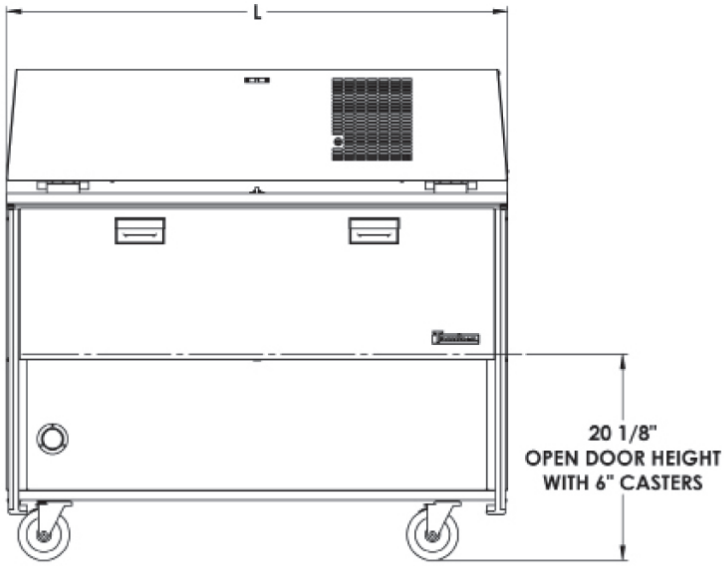

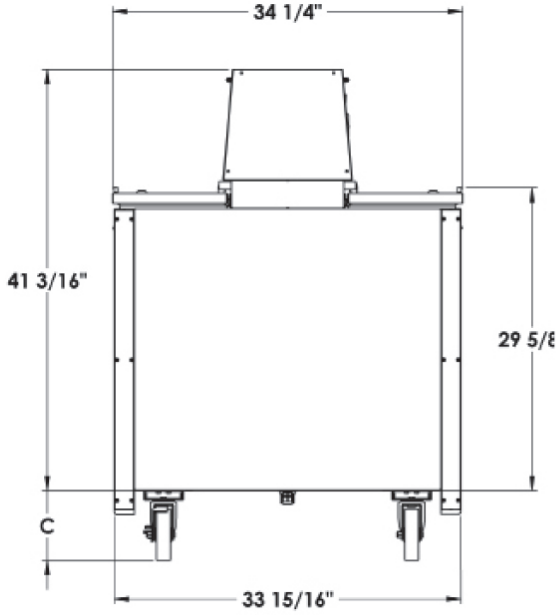

Project _____

AIA # _____ SIS # _____

Item # _____ Quantity _____ C.S.I. Section 114000

COMMERCIAL REFRIGERATION

TRAULSEN MILK COOLERS

RMC SERIES

MILK COOLER

12 CRATE CAPACITY MODELS

MODELS

Single Access Models: RMC49S4, RMC49S6
Double Access Models: RMC49D4, RMC49D6

MODELS	RMC49
DIMENSIONAL DATA	
Net Crate Capacity 13 x 13 in.[1]	12
Net Crate Capacity 13 x 19 in.[1]	8
Length (L)-Overall in.	49 (124.5 cm)
Depth-Single Cabinet Only in.	32 1/8 (81.6 cm)
Depth-Double Cabinet Only in.	34 1/4 (87 cm)
Height-Overall on 6" Casters	48 (124.5 cm)
Net Weight uncrated lbs. (kg)	518 (235)
ELECTRICAL DATA	
Voltage	115/60/1
Single Access Full Load Amperes | MDEC[2]	7.2 | 2.13 KWH/Day
Double Access Full Load Amperes | MDEC[2]	7.2 | 2.18 KWH/Day
NEMA Plug Type	5-15P
Single Access Cabinet Volume	17.65
Double Access Cabinet Volume	18.77
REFRIGERATION DATA	
Refrigerant	R-450A
Refrigerant Amount oz. (gr)	12.5 (354)
BTU[3] /HR	1945

NOTE:
* Figures in parentheses reflect metric equivalents.
1. Net Capacity cu. ft.
2. MDEC = Maximum Daily Energy Consumption
3. Based on a 90°F ambient and 20°F evaporator.

Equipped With One NEMA 5-15 P Plug

Note: When ordering please specify: Door Access, Caster Height and Other Options. Continued product development may necessitate specification changes

EQUIPMENT SPECIFICATIONS

CONSTRUCTION, HARDWARE, INSULATION
Cabinet exterior and interior is constructed of stainless steel. Interior sides, back and front are also stainless steel. The exterior cabinet bottom is constructed of stainless steel.
Gasket profile and Santoprene® material simplify cleaning and increase overall gasket life.
Both the cabinet and doors are insultated with non-CFC, foamed in place polyurethane.

DOOR/ACCESS
Front sliding protects gasket(s). Lockable lift up top access door.

REFRIGERATION SYSTEM
A balanced, top mounted side and front and rear breathing, refrigeration system using environmentally friendly, non-flammable R-450A refrigerant is provided. It features an air-cooled hermetic compressor and a forced air evaporator coil. Dial thermometer. An 8' cord and plug is provided. Standard operating temperature is 34° to 38°F (1.1° to 3.3 °C).

INTERIOR/DUNNAGE RACKS
Heavy duty removable dunnage racks protect cabinet and promote airflow.

WARRANTIES
Both a three year parts and labor warranty and five year compressor parts warranty.

Approved by_____ Date_____ Approved by_____ Date_____