GRIDDLES & BROILERS

VHP SERIES
HEAVY DUTY GAS HOT PLATE

Model VHP636

- ☐ **VHP212** 12" wide
- ☐ **VHP424** 24" wide
- ☐ **VHP636** 36" wide
- ☐ **VHP848** 48" wide

STANDARD FEATURES

- Stainless steel sides, control panel, top trim and backsplash.
- Full width pull out crumb tray.
- Heavy duty cast iron top grates.
- 30,000 BTU/hr. (27,500 BTU/hr. for LP gas) open burners with lift-off heads.
- Standing pilot ignition system.
- One infinite heat control valve for each burner.
- 4" adjustable legs.
- ¾" NPT rear gas connection and gas pressure regulator.
- One year limited parts and labor warranty.

OPTIONS

- ☐ Cutting board.
- ☐ Condiment rail.
- ☐ Plate rail.
- ☐ Stainless steel stand with undershelf and casters.
- ☐ Step-up burners. Rear burners elevated 4".

SPECIFICATIONS

Exterior Dimensions:
_____" wide x 31⅜" deep x 12" working height

CSA Design Certified. NSF Certified.

SPECIFY TYPE OF GAS WHEN ORDERING.
SPECIFY ALTITUDE WHEN ABOVE 3,999 FT.

VULCAN
a division of ITW Food Equipment Group LLC
P.O. Box 696 ■ Louisville, KY 40201 ■ Toll-free: 1-800-814-2028 ■ Local: 502-778-2791 ■ Quote & Order Fax: 1-800-444-0602

VHP SERIES
HEAVY DUTY GAS HOT PLATE

INSTALLATION REQUIREMENTS:

1. A gas pressure regulator supplied with the unit must be installed. Natural Gas 5.0" (127 mm) W.C. Propane Gas 10.0" (254 mm) W.C.
2. An adequate ventilation system is required for commercial cooking equipment. Information may be obtained by writing to the National Fire Protection Association, 1 Batterymarch Park, Quicy, MA 02169, www.NFPA.org. When writing refer to NFPA No. 96.
3. These units are manufactured for installation in accordance with National Fuel Gas Code, ANSI-Z223.1/NFPA #54 (latest edition). Copies may be obtained from The American Gas Association Accredited Standards Committee Z223, @ 400 N. Capital St. NW, Washington, DC 20001, or the Secretary Standards Council, NFPA, 1 Batterymarch Park Quincy, MA 02169-7471.

   NOTE: In the Commonwealth of Massachusetts
   All gas appliances vented through a ventilation hood or exhaust system equipped with a damper or with a power means of exhaust shall comply with 248 CMR.
4. Equipment clearance:

	Non-Combustibles		Combustibles	
	Sides	Back	Sides	Back
Standard	0"	0"	13"	6"
Step-Up	0"	0"	13"	9"

5. This appliance is intended for commercial installation only and is not intended for home use.

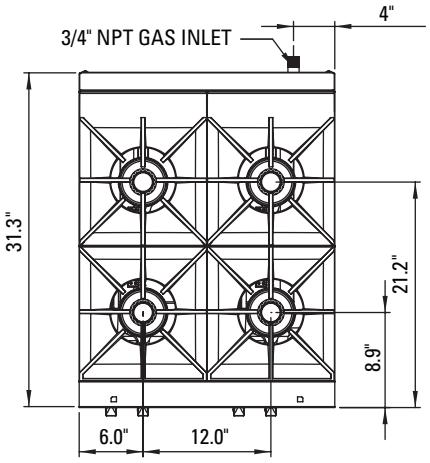

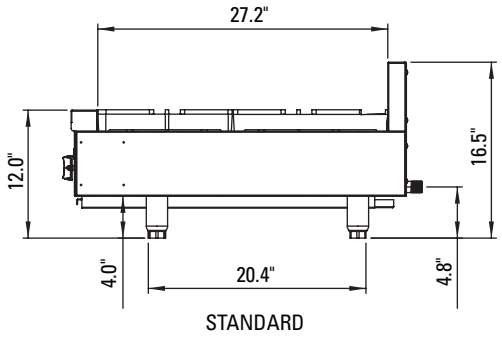

STANDARD

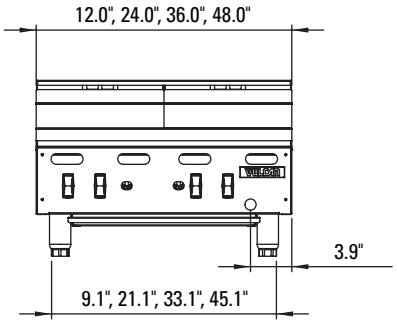

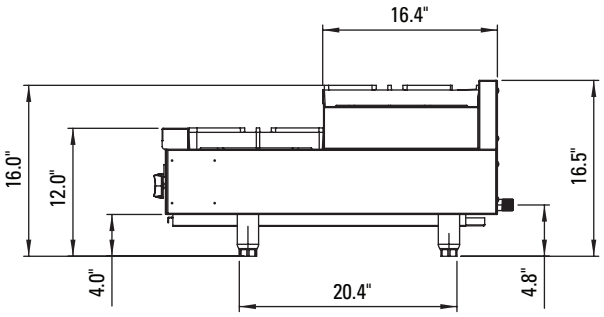

STEP-UP

MODEL	WIDTH	DEPTH	OVERALL HEIGHT*	WORKING HEIGHT*	NO. OF BURNERS	TOTAL BTU/HR. NATURAL GAS	TOTAL BTU/HR. PROPANE GAS	APPROX SHIP WT. (LB/KG)
VHP212	12"	31⅜"	16⅝"	12"	2	60,000	55,000	95 lbs./43 kg
VHP424	24"				4	120,000	110,000	165 lbs./74 kg
VHP636	36"				6	180,000	165,000	265 lbs./119 kg
VHP848	48"				8	240,000	220,000	310 lbs./140 kg

*These are nominal dimensions and can vary by +1.75" with adjustable legs.

a division of ITW Food Equipment Group LLC

P.O. Box 696 ■ Louisville, KY 40201 ■ Toll-free: 1-800-814-2028 ■ Local: 502-778-2791 ■ Quote & Order Fax: 1-800-444-0602

NOTE: In line with its policy to continually improve its products, Vulcan reserves the right to change materials and specifications without notice.

Printed On Recycled Paper