EAGLE GROUP®

Profit from the Eagle Advantage®

Item No.: _____

Project No.: _____

S.I.S. No.: _____

Specification Sheet

Soiled Dishtables—Island Design

Short Form Specifications

Eagle Soiled Dishtables, model _____. Top to be 16/430, 16/304, or 14/304 stainless steel with all seams welded, ground smooth, and polished. Front and ends to have 3″-high upturn with a 1½″-diameter rolled edge. Galvanized hat channels welded to underside. Backsplash is 8″-high. 20½″ opening for dishwasher. 20″ x 20″ x 5″ deep stainless steel prerinse sink with basket drain, hole for deck mounted prerinse spray, and rubber scrap block provided. Legs to be 1⅝″ O.D. galvanized tubing with 1″ diameter crossbracing and adjustable bullet feet (14/304 models come standard with stainless steel hat channels welded to underside of table, stainless steel crossbraced legs, and adjustable metal feet).

MODELS:

❑ *SDTCIL-60-16/4*	❑ *SDTCIL-84-16/4*	❑ *SDTCIL-108-16/4*
❑ *SDTCIL-60-16/3*	❑ *SDTCIL-84-16/3*	❑ *SDTCIL-108-16/3*
❑ *SDTCIL-60-14/3*	❑ *SDTCIL-84-14/3*	❑ *SDTCIL-108-14/3*
❑ *SDTCIR-60-16/4*	❑ *SDTCIR-84-16/4*	❑ *SDTCIR-108-16/4*
❑ *SDTCIR-60-16/3*	❑ *SDTCIR-84-16/3*	❑ *SDTCIR-108-16/3*
❑ *SDTCIR-60-14/3*	❑ *SDTCIR-84-14/3*	❑ *SDTCIR-108-14/3*
❑ *SDTCIL-72-16/4*	❑ *SDTCIL-96-16/4*	❑ *SDTCIL-120-16/4*
❑ *SDTCIL-72-16/3*	❑ *SDTCIL-96-16/3*	❑ *SDTCIL-120-16/3*
❑ *SDTCIL-72-14/3*	❑ *SDTCIL-96-14/3*	❑ *SDTCIL-120-14/3*
❑ *SDTCIR-72-16/4*	❑ *SDTCIR-96-16/4*	❑ *SDTCIR-120-16/4*
❑ *SDTCIR-72-16/3*	❑ *SDTCIR-96-16/3*	❑ *SDTCIR-120-16/3*
❑ *SDTCIR-72-14/3*	❑ *SDTCIR-96-14/3*	❑ *SDTCIR-120-14/3*

right-hand model shown

Design and Construction Features

- 14 or 16 gauge stainless steel.
- 30″ (762mm)-wide table with choice of six lengths.
- Left or right hand operation.
- 20″ x 20″ x 5″ (508 x 508 x 127mm) prerinse sink punched for standard basket drain.
- 8″ (203mm)-high backsplash.
- Hole supplied for deck-mount prerinse.
- Adjustable non-marking bullet feet with up to 1″ (25mm) adjustment.
- 1½″ (38mm) raised rolled rim on front and end.
- 1⅝″ (41mm)-diameter galvanized legs with welded 1″ (25mm)-diameter crossbrace.
- All Spec-Master® 14 gauge type 304 dishtables come standard with stainless steel crossbraced legs and gussets, complete with metal feet.

Options / Accessories *

- ❑ Undershelf
- ❑ Stainless steel legs
- ❑ Stainless steel gussets
- ❑ Stainless steel feet
- ❑ Scrap basket
- ❑ Rack runner
- ❑ Prerinse spray units

* See Spec Sheet #**EG50.07** for full line of options and accessories.

EAGLE GROUP
100 Industrial Boulevard, Clayton, DE 19938-8903 USA
Phone: 302-653-3000 • Fax: 302-653-2065
www.eaglegrp.com

Foodservice Division: Phone 800-441-8440
MHC/Retail Display Divisions: Phone 800-637-5100

Certifications / Approvals

NSF

AutoQuotes

KCL

For custom configuration or fabrication needs, contact our **SpecFAB® Division.**
Phone: 302-653-3000 • Fax: 302-653-3091 • e-mail: specfab@eaglegrp.com

Spec sheets available for viewing, printing or downloading from our online literature library at *www.eaglegrp.com*

Eagle Foodservice Equipment, Eagle MHC, SpecFAB®, and Retail Display are divisions of Eagle Group. ©2009 by the Eagle Group

KaTom Restaurant Supply, Inc.

EAGLE GROUP®
Profit from the Eagle Advantage®

Item No.: _____
Project No.: _____
S.I.S. No.: _____

Soiled Dishtables—Island Design

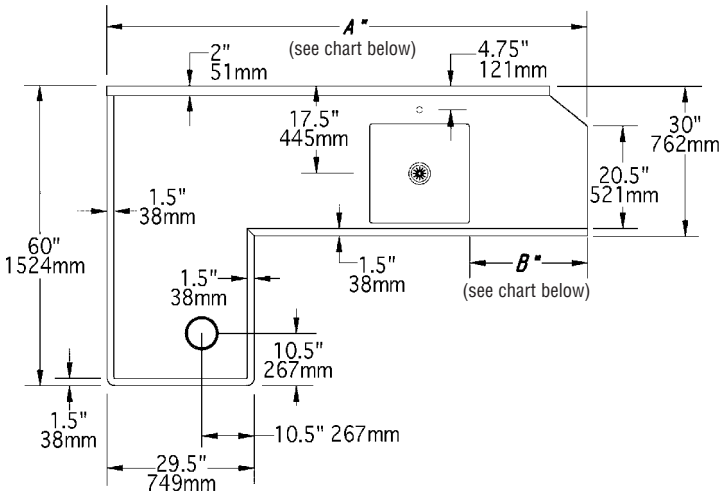

TOP VIEW

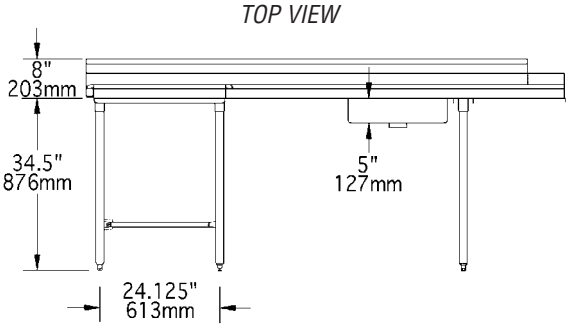

FRONT VIEW

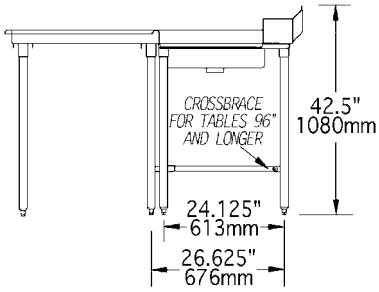

SIDE VIEW

left-hand model shown

16 gauge type 430 model #	16 gauge type 304 model #	Spec-Master® 14 gauge type 304 model #	description	Dimensions A in.	A mm	B in.	B mm	weight lbs.	weight kg
SDTCIL-60-16/4	***SDTCIL-60-16/3***	***SDTCIL-60-14/3***	left-hand model	60″	1524	11½″	292	168	76.2
SDTCIR-60-16/4	***SDTCIR-60-16/3***	***SDTCIR-60-14/3***	right-hand model	60″	1524	11½″	292	168	76.2
SDTCIL-72-16/4	***SDTCIL-72-16/3***	***SDTCIL-72-14/3***	left-hand model	72″	1829	23½″	597	178	80.7
SDTCIR-72-16/4	***SDTCIR-72-16/3***	***SDTCIR-72-14/3***	right-hand model	72″	1829	23½″	597	178	80.7
SDTCIL-84-16/4	***SDTCIL-84-16/3***	***SDTCIL-84-14/3***	left-hand model	84″	2134	35½″	902	188	85.3
SDTCIR-84-16/4	***SDTCIR-84-16/3***	***SDTCIR-84-14/3***	right-hand model	84″	2134	35½″	902	188	85.3
SDTCIL-96-16/4	***SDTCIL-96-16/3***	***SDTCIL-96-14/3***	left-hand model	96″	2438	47½″	1207	198	89.9
SDTCIR-96-16/4	***SDTCIR-96-16/3***	***SDTCIR-96-14/3***	right-hand model	96″	2438	47½″	1207	198	89.9
SDTCIL-108-16/4	***SDTCIL-108-16/3***	***SDTCIL-108-14/3***	left-hand model	108″	2743	59½″	1511	208	94.3
SDTCIR-108-16/4	***SDTCIR-108-16/3***	***SDTCIR-108-14/3***	right-hand model	108″	2743	59½″	1511	208	94.3
SDTCIL-120-16/4	***SDTCIL-120-16/3***	***SDTCIL-120-14/3***	left-hand model	120″	3048	71½″	1816	218	98.9
SDTCIR-120-16/4	***SDTCIR-120-16/3***	***SDTCIR-120-14/3***	right-hand model	120″	3048	71½″	1816	218	98.9

EAGLE GROUP
100 Industrial Boulevard, Clayton, DE 19938-8903 USA
Phone: 302-653-3000 • Fax: 302-653-2065
www.eaglegrp.com

Foodservice Division: Phone 800-441-8440
MHC/Retail Display Divisions: Phone 800-637-5100

Printed in U.S.A.
©2009 by Eagle Group
Rev. 06/09

Spec sheets available for viewing, printing or downloading from our online literature library at *www.eaglegrp.com*

Although every attempt has been made to ensure the accuracy of the information provided, we cannot be held responsible for typographical or printing errors. Information and specifications are subject to change without notice. Please confirm at time of order.

KaTom Restaurant Supply, Inc.