ITEM NO. _____

BUILT-IN MODULAR WARMERS

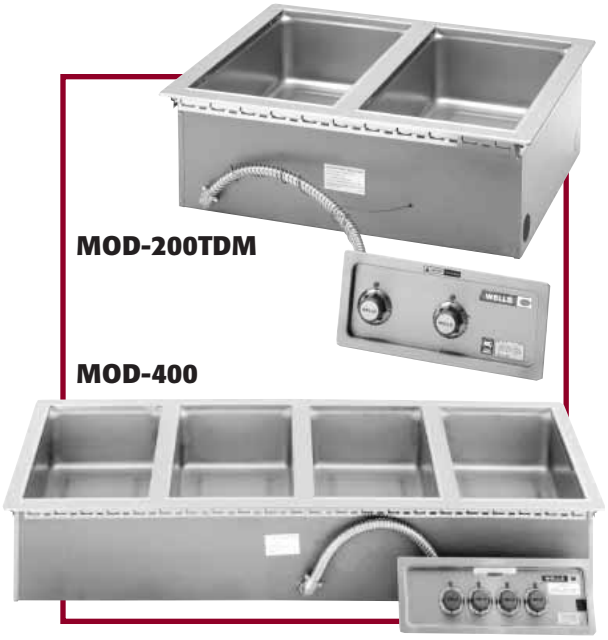

Features

- **Individual controls** on each well give the warmers maximum versatility.
- **Wellslok** allows for quick and easy installation in stainless steel countertops.
- Designed for **wet or dry operation**.
- **Fully insulated** for greater efficiency.
- **Thermostat (T) models** with higher wattage provide more accurate temperature control.
- **Each well is one-piece, deep-drawn, stainless steel construction** for maximum strength and durability.
- **The MOD series Warmers** are Underwriters Laboratories, Inc. LISTED and meet the National Sanitation Foundation and Canadian standards.
- **A one-year warranty** against defects covers parts and labor.

Specifications

Weights:	Lbs.	KG
MOD-100 series:		
Installed	19	9
Shipping	21	10
MOD-200 series:		
Installed	46	21
Shipping	56	25
MOD-300 series:		
Installed	64	29
Shipping	78	35
MOD-400 series:		
Installed	81	37
Shipping	98	44
MOD-500 series:		
Installed	101	46
Shipping	122	55

Accessories / Options

Wellslok Extension Kit, designed for installation in a variety of countertops up to 1" thick, refer to installation instructions, 22593

Drain Valve Extension Kit, extension from drain to counter front with remote handle, for use with "D" models only, excluding "DM" models, 20385

Drain Screen, 21709

Optional 72" Wiring, infinite or thermostatically controlled warmers, priced per well

Individual drain (D), for all models

Individual thermostat (T), for all models

Individual drain connected to the manifold (DM), for all models except MOD-100

Individual thermostat and drain connected to the manifold(TDM), for all models except MOD-100

Explanation of Built-In Warmer Suffixes:

D . . . . with drain
T . . . . thermostatically controlled
TD . . . . thermostatically controlled/with drain
DM . . . with drain/connected to drain manifold/ infinite control
TDM . . thermostatically controlled/with drain/ connected to drain manifold
None . . infinite control

Export

The following models are available for export and meet the standards for CE:

- MOD-100EUT, 220-240V, 1Ø, 1650 watts
- MOD-100EUTD, 220-240V, 1Ø, 1650 watts

KaTom Restaurant Supply, Inc.

LISTED E6070 | STD.4 | E6070 | EXPORT MODELS ONLY

MODELS
MOD-100, MOD-100D
MOD-100T, MOD-100TD
BUILT-IN MODULAR WARMERS

DIMENSIONS: INCH (MM)

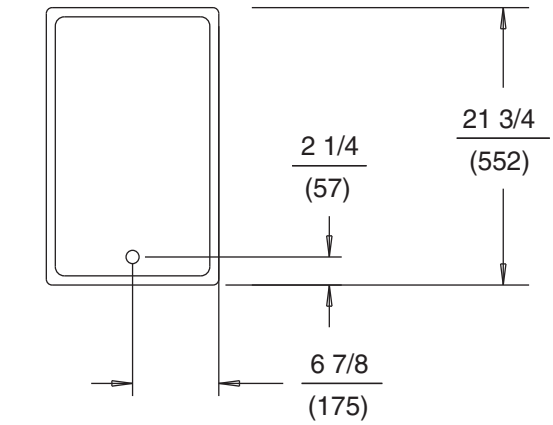

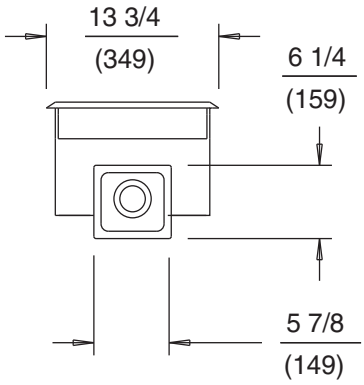

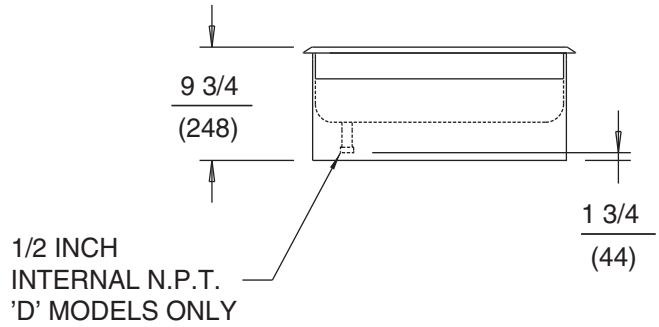

MINIMUM CLEARANCE REQUIRED FROM UNIT TO THE NEAREST SURFACE.			
BACK 1 (25)	SIDE 1 (25)	BOTTOM 6 3/4 (171)	FRONT 4 1/8 (105)

MOD-100, MOD-100D, MOD-100T AND MOD-100TD ELECTRICAL SPECIFICATIONS:

MODELS	VOLTS	WATTS	AMPS	PHASE	POWER SUPPLY CORD
MOD-100	120	1200	10.0	SINGLE	NONE
MOD-100	208	900	4.3	SINGLE	NONE
MOD-100	240	1200	5.0	SINGLE	NONE
MOD-100T	120	1650	13.8	SINGLE	NONE
MOD-100T	208	1240	6.0	SINGLE	NONE
MOD-100T	240	1650	6.9	SINGLE	NONE
● MOD-100EUT	220-240	1650	6.9	SINGLE	NONE

All models with a 'D' or 'DM' suffix have the same electrical specs as the standard MOD-100 or MOD-100T models.

● Denotes export (EU) products.

NOTE: Specifications are subject to change without notice. See installation instruction sheet prior to installing the unit. This document is not for installation purposes.

WELLS MANUFACTURING COMPANY
2 ERIK CIRCLE, PO BOX 280, VERDI, NV 89439 U.S.A. • USA PHONE: (775) 689-5700 • FAX: (775) 689-5972
FOR ORDERS ONLY: (888) 356-5362 • FAX: (800) 356-5142 • www.wellsbloomfield.com
A SPECIALTY EQUIPMENT COMPANY • 2000 WELLS MANUFACTURING • PRINTED IN THE U.S.A. • 7/00 • REV(G) • PART NO. 37099

KaTom Restaurant Supply, Inc.