ITEM NO. _____

RW SERIES DRAWER WARMERS

Wells Drawer Warmers can keep a variety of foods hot and ready to serve. Their deep drawers accept all standard 12" x 20" pans up to 6" deep, and are ideal for warming dinner rolls, breads, baked potatoes, tortilla chips, corn on the cob, vegetables, rice and more. All Wells warmers come with individual controls on each drawer for temperature and humidity, so one drawer's food can be hot and crispy, while another drawer's food is kept warm and moist.

Specifications

Overall Dimensions:	Inches	MM
Width	29 1/4	743
Depth	21 1/2	546
Height (incl. 4" legs)		
RW-1 series	14 7/8	378
RW-2 series	25	635
Height (no legs)		
RW-3 series	31 1/8	791
RW-4 series	41 1/8	1045
Temperature Range:	**Fahrenheit**	**Celsius**
RW series	90° to 210°	32° to 99°
Pre-Heat Time to 175° F:	**120V & 240V**	**208V**
RW series	15 minutes	22 minutes
Weights:	**Lbs.**	**KG**
RW-1 series:		
Installed	65	29
Shipping	77	35
RW-2 series:		
Installed	102	46
Shipping	126	57
RW-3 series:		
Installed	134	61
Shipping	170	77
RW-4 series:		
Installed	162	73
Shipping	210	95

Export

The following models are available for export and meet the standards for CE:

- RW-1EU, 220-240V, 1Ø, 450 watts, 22330
- RW-2EU, 220-240V, 1Ø, 900 watts, 22331
- RW-1HDEU, 220-240V, 1Ø, 450 watts, 22334
- RW-2HDEU, 220-240V, 1Ø, 900 watts, 22335

Features

- **Individual thermostatic temperature** control on each drawer gives these warmers maximum versatility.
- **Durable stainless steel tracks and bearings** provide for smooth operation.
- **Adjustable front vent** allows for humidity control on each drawer.
- **A stainless steel, 12" x 20", 6" deep pan** is provided with each drawer.
- **Fully insulated** for maximum efficiency.
- **Models with optional built-in thermometer (T)** are NSF approved for potentially hazardous foods.
- **Heavy Duty (HD) models** have reinforced construction and are recommended for use with heavier products.
- **The RW series Drawer Warmers** are Underwriters Laboratories, Inc. LISTED and meet the National Sanitation Foundation and Canadian standards.
- **A one-year warranty** against defects covers parts and labor.

Accessories / Options

Humitrol Rack, stainless steel, one per drawer, non-splash, 20624

Optional Thermometer (T), for individual drawers, contact factory

Caster Kit, 10" high casters, set of four, includes 2 each with front brakes, 21034

Caster Kit, 3 1/2" high casters, set of four with brakes, 3" diameter, 21947

Caster Kit, 2 1/4" high casters, set of four, includes 2 each with front brakes, 2" diameter, 22025

Leg Kit, set of four, metal, 6", 21607

Leg Kit, set of four, metal, 4", 20563

Leg Kit, set of four, plastic, 4", 20314

Supply, Inc.

LISTED E6070 | STD.4 | E6070 | EXPORT MODELS ONLY

MODELS
RW-1, RW-1EU, RWT-1
RWT-1EU, RW-1HD, RW-1HDEU
RWT-1HD, RWT-1HDEU
DRAWER WARMERS

DIMENSIONS: INCH / (MM)

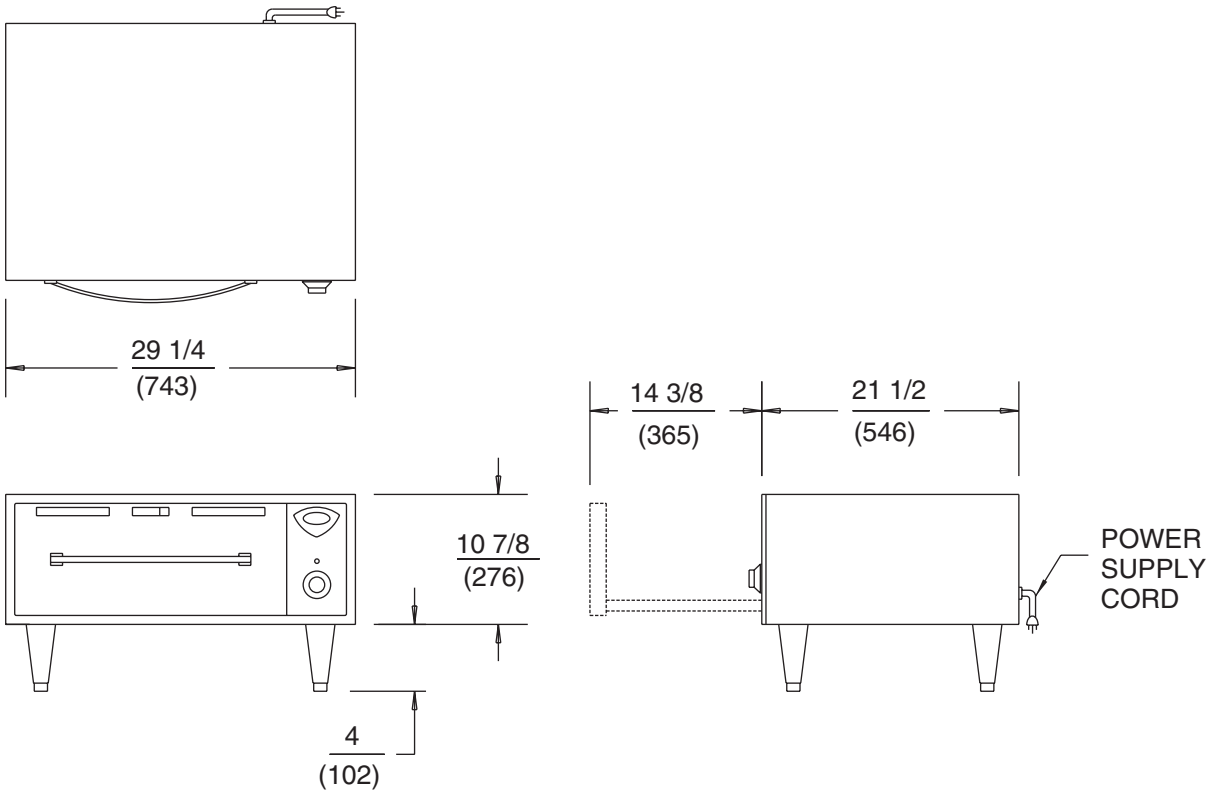

RW-1 SERIES ELECTRICAL SPECIFICATIONS:

MODELS	VOLTS	WATTS	AMPS	PHASE	POWER SUPPLY CORD
RW-1	120	450	3.8	SINGLE	NEMA 5-15P
RW-1	208	338	1.6	SINGLE	NEMA 6-15P
RW-1	240	450	1.9	SINGLE	NEMA 6-15P
RW-1EU	220-240	450	1.9	SINGLE	SUPPLIED

All models with a 'T' or 'HD' suffix have the same electrical specs as the standard versions.

Denotes export (EU) products.

NOTE: Specifications are subject to change without notice.

WELLS MANUFACTURING COMPANY
2 ERIK CIRCLE, PO BOX 280, VERDI, NV 89439 U.S.A. • USA PHONE: (775) 689-5700 • FAX: (775) 689-5972
FOR ORDERS ONLY: (888) 356-5362 • FAX: (800) 356-5142 • www.wellsbloomfield.com
A SPECIALTY EQUIPMENT COMPANY • 2000 WELLS MANUFACTURING • PRINTED IN THE U.S.A. • 8/00 • REV(H) • PART NO. 41945

KaTom Restau

LISTED E6070 | STD.4 | E6070 | EXPORT MODELS ONLY

MODELS
RW-2, RW-2EU, RWT-2
RWT-2EU, RW-2HD, RW-2HDEU
RWT-2HD, RWT-2HDEU
DRAWER WARMERS

DIMENSIONS: INCH / (MM)

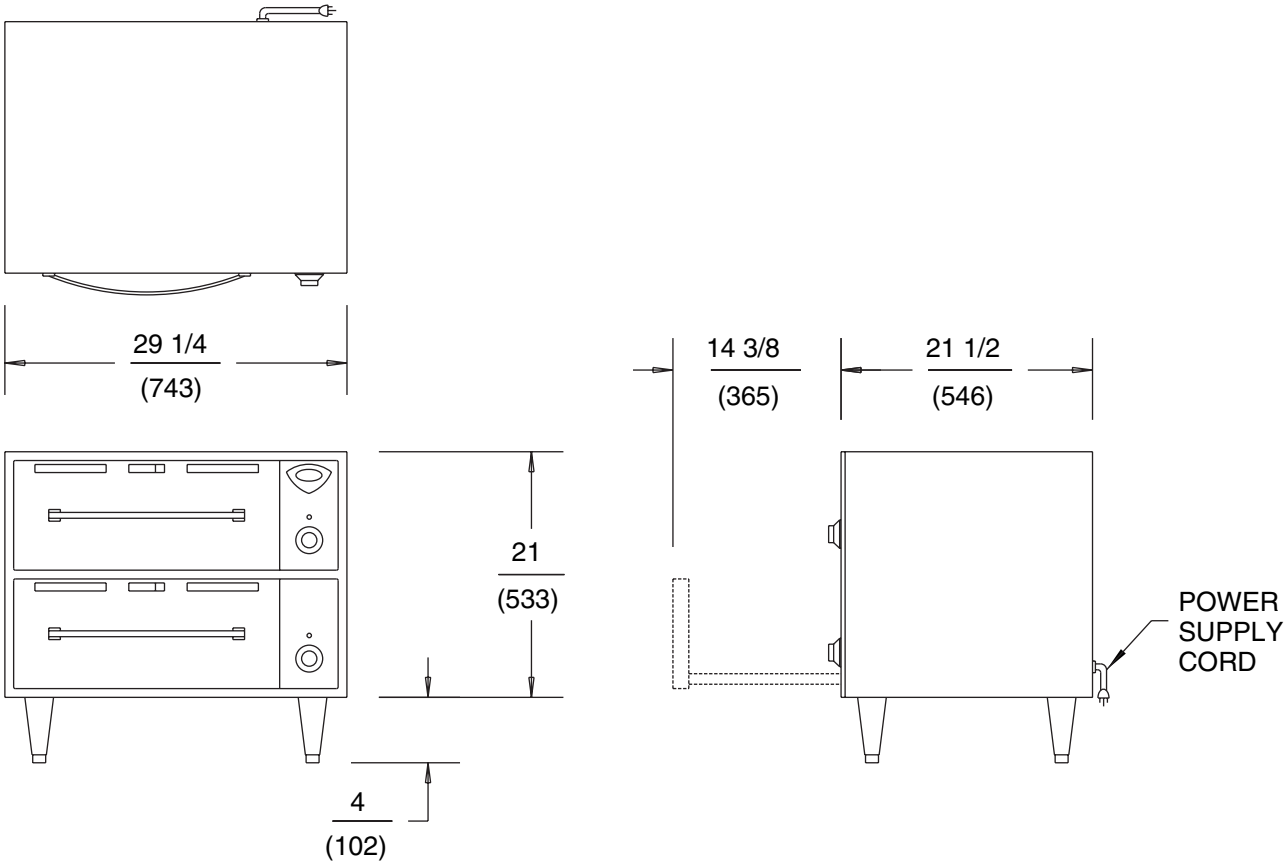

RW-2 SERIES ELECTRICAL SPECIFICATIONS:

MODELS	VOLTS	WATTS	AMPS	PHASE	POWER SUPPLY CORD
RW-2	120	900	7.5	SINGLE	NEMA 5-15P
RW-2	208	676	3.3	SINGLE	NEMA 6-15P
RW-2	240	900	3.8	SINGLE	NEMA 6-15P
RW-2EU	220-240	900	3.8	SINGLE	SUPPLIED

All models with a 'T' or 'HD' suffix have the same electrical specs as the standard versions.

Denotes export (EU) products.

NOTE: Specifications are subject to change without notice.

WELLS MANUFACTURING COMPANY
2 ERIK CIRCLE, PO BOX 280, VERDI, NV 89439 U.S.A. • USA PHONE: (775) 689-5700 • FAX: (775) 689-5972
FOR ORDERS ONLY: (888) 356-5362 • FAX: (800) 356-5142 • www.wellsbloomfield.com
A SPECIALTY EQUIPMENT COMPANY • 2000 WELLS MANUFACTURING • PRINTED IN THE U.S.A. • 8/00 • REV(H) • PART NO. 41945

Supply, Inc.

LISTED E6070 | STD.4 | LISTED E6070

MODELS
RW-3, RWT-3, RW-3HD, RWT-3HD
RW-4, RWT-4, RW-4HD, RWT-4HD
DRAWER WARMERS

DIMENSIONS:

INCH
(MM)

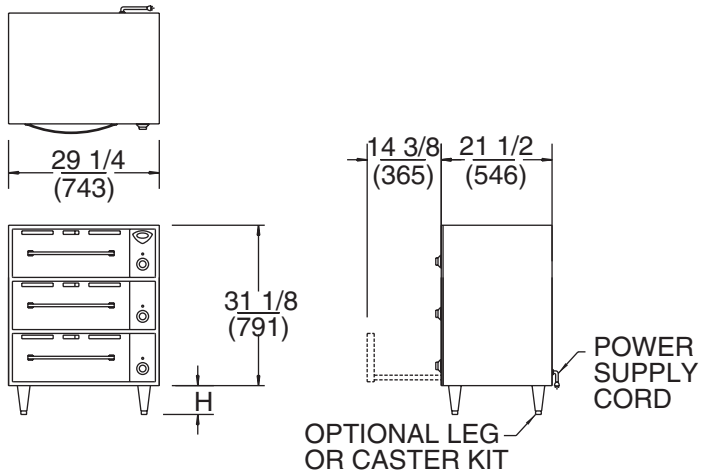

MODEL
RW-3

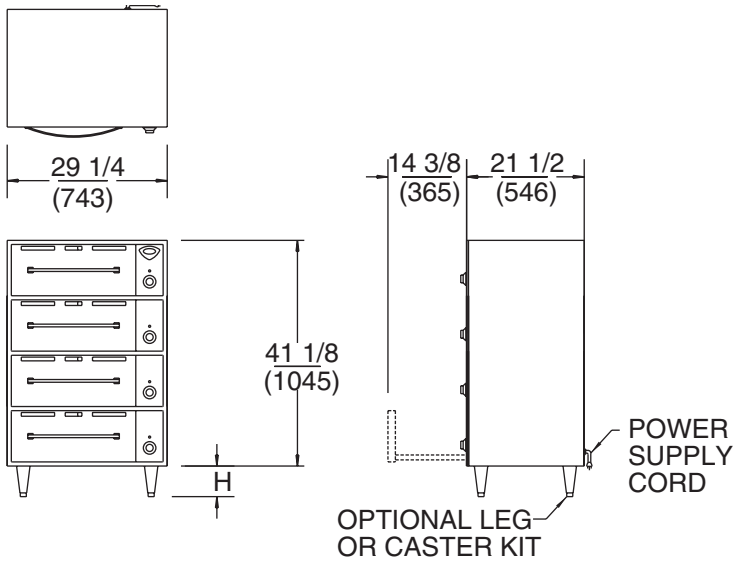

MODEL
RW-4

RW-3 SERIES AND RW-4 SREIES ELECTRICAL SPECIFICATIONS:

MODELS	VOLTS	WATTS	AMPS	PHASE	POWER SUPPLY CORD
RW-3	120	1350	11.3	SINGLE	NEMA 5-15P
RW-3	208	1014	4.9	SINGLE	NEMA 6-15P
RW-3	240	1350	5.6	SINGLE	NEMA 6-15P
RW-4	120	1800	15.0	SINGLE	NEMA 5-15P
RW-4	208	1352	6.5	SINGLE	NEMA 6-15P
RW-4	240	1800	7.5	SINGLE	NEMA 6-15P

All models with a 'T' or 'HD' suffix have the same electrical specs as the standard versions.

NOTE: Specifications are subject to change without notice.

WELLS MANUFACTURING COMPANY
2 ERIK CIRCLE, PO BOX 280, VERDI, NV 89439 U.S.A. • USA PHONE: (775) 689-5700 • FAX: (775) 689-5972
FOR ORDERS ONLY: (888) 356-5362 • FAX: (800) 356-5142 • www.wellsbloomfield.com
A SPECIALTY EQUIPMENT COMPANY • 2000 WELLS MANUFACTURING • PRINTED IN THE U.S.A. • 8/00 • REV(H) • PART NO. 41945

KaTom Restaur