U.S. Range

Cuisine Series Heavy Duty Spreaders

Item: _____

Quantity: _____

Project: _____

Approval: _____

Date: _____

Cuisine Series Heavy Duty Spreaders

Models:

☐ CCSP-12 ☐ CCSP-18 ☐ CCSP-36

☐ C836-12-0 ☐ C836-18-0 ☐ C836-36-0

Spreader Plates, Spreaders & Cabinets; & Spreader Plates w/Apron Front

Model C836-12-0

Standard Features:

- Cabinet base and modular models
- Stainless steel top.
- Stainless steel front & sides.
- Stainless steel front rail w/position adjustment
- 1 1/4" NPT front gas manifold
- Can be installed individually or in a battery
- 6" (152mm) H stainless steel stub back
- 6" (152mm) chrome steel adjustable legs

Optional Features:

☐ Stainless steel back

☐ Single or double deck high shelf or back riser

☐ Stainless steel intermediate shelf for cabinet base

☐ Stainless steel door(s) for cabinet base units

☐ Flanged feet set of four

☐ Swivel casters (4) w/ front locking

☐ Casters w/ polyurethane wheels – non marking

☐ Manifold "T"; accepts 2" pipe to rear (not included)

☐ "T" fitting extension 3/4" or 1 1/4" available .

NOTE: Spreaders suppled with casters must be installed with an approved restraining device.

Specifications:

U.S. Range Cuisine Series Spreader Model _____. Stainless steel top, front, and sides. 6" (152mm) stainless steel legs with adjustable feet.

Spreaders and Cabinets

Model#	Description
C836-12-0	12" Wide, Cuisine Range Match Spreaders - With Open Cabinet
C836-18-0	18" Wide, Cuisine Range Match Spreaders - With Open Cabinet
C836-36-0	36" Wide, Cuisine Range Match Spreaders - With Open Cabinet

NSF

Spreader Plate

Model #	Description
CCSP-12	12" Wide Cuisine Spreader Plate
CCSP-18	18" Wide Cuisine Spreader Plate
CCSP-36	36" Wide Cuisine Spreader Plate

Garland Commercial Ranges Ltd.
1177 Kamato Road,
Mississauga, Ontario
L4W 1X4 CANADA

General Inquires 1-905-624-0260
USA Sales, Parts and Service 1-800-424-2411
Canadian Sales 1-888-442-7526
Canada or USA Parts/Service 1-800-427-6668

Manitowoc

U.S. Range

Cuisine Series Heavy Duty Spreaders

Exterior Dimensions			
Series	836-12-0	836-18-0	836-36-0
Width	12" (305mm)	18" (457mm)	36" (914mm)
Depth	37-7/8" (962mm)	37-7/8" (962mm)	37-7/8" (962mm)
Height w/o Legs	30" (762mm)	30" (762mm)	30" (762mm)
Height w/Legs	36" (914mm)	36" (914mm)	36" (914mm)
Cabinet Interior Dimensions			
Width	9-1/2" (241mm)	15-1/2" (394mm)	32-1/2" (826mm)
Depth	28-1/2" (724mm)	28-1/2" (724mm	28-1/2" (724mm
Height	19-1/2" (495mm)	19-1/2" (495mm)	19-1/2" (495mm)

Combustible Wall Clearance	
Sides	Back
0" (0mm)	0" (0mm)

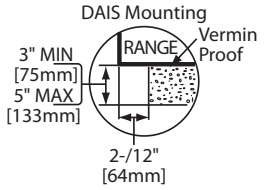

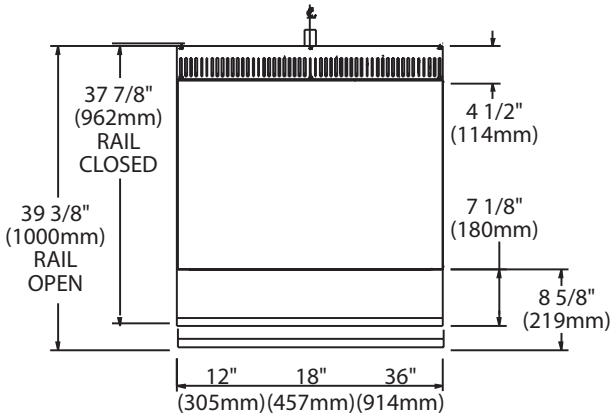

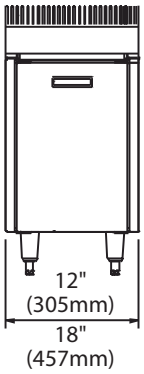

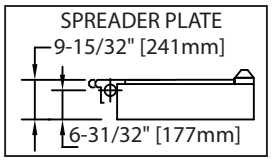

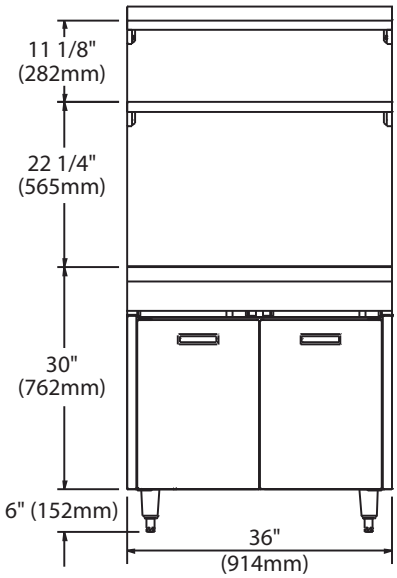

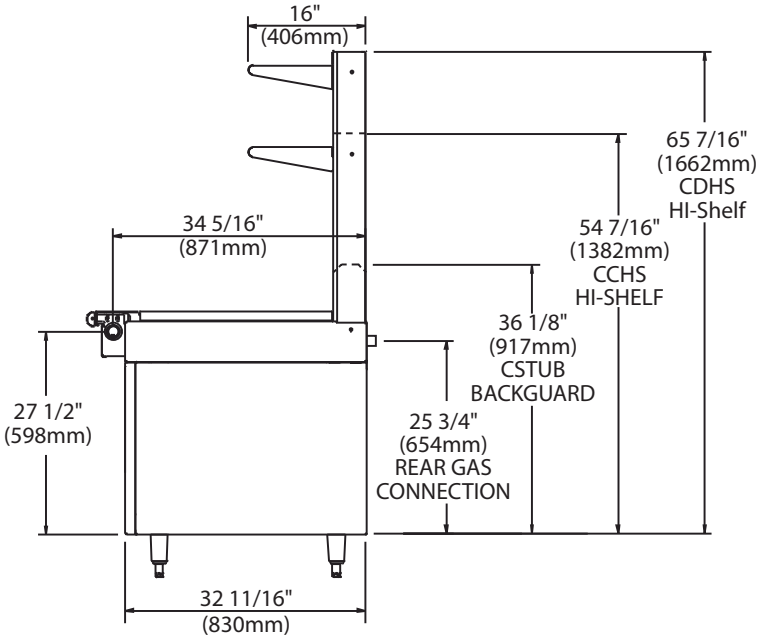

Form# C836-12/18/36-0 (03/06/13)

Garland Commercial Ranges Ltd.
1177 Kamato Road,
Mississauga, Ontario
L4W 1X4 CANADA

General Inquires 1-905-624-0260
USA Sales, Parts and Service 1-800-424-2411
Canadian Sales 1-888-442-7526
Canada or USA Parts/Service 1-800-427-6668

Manitowoc