Garland

Master Gas Convection Oven

Item: _____

Quantity: _____

Project: _____

Approval: _____

Date: _____

Master Gas Convection Oven

Models:

☐ MCO-GS-10-S ☐ MCO-GS-20-S ☐ MCO-GD-10-S ☐ MCO-GD-20-S

Model MCO-GS-10-S

Note: Ovens supplied with casters must be installed with an approved restraining device.

Standard Features:

- Master 200 Solid State Control with 150° F (66°C) to 500°F (260°C) temperature range and electromechanical timer
- Direct spark ignition with 100% safety shutoff
- 2-speed fan control (high & low) w/3/4HP fan motor
- Total of 60,000 BTU (17.6 kW) loading per oven cavity
- Natural or propane gas
- Stainless steel front, sides, top, and legs
- 60/40 dependent door design with double pane thermal window in both doors and interior lighting
- Full Length, stainless steel positive door closure
- Patented "Safety Door System"
- Porcelain enameled oven interior with coved corners
- 24" cooking cavity height w/6 chrome plated oven racks on 13-position rack guides
- Double deck models available, suffix -20-S
- Deep depth models available prefix MCO-GD
- 1 year limited parts & labor warranty (USA & Canada only)
- 2 year limited parts & 1 year labor warranty (USA only)
- 2 year limited parts & labor warranty (USA Kindergarden to grade 12 schools only)
- 5 year limited door warranty, excluding window (USA & Canada only)

Optional Features:

- ☐ 80,000 BTU (23.4kW) burner package (natural gas)
- ☐ Stainless steel solid door or doors (specify) – No Charge
- ☐ Stainless steel oven interior
- ☐ Extra oven racks
- ☐ Swivel casters, (4) w/front brakes
- ☐ 4 Low profile casters, w/front brakes (double ovens only)
- ☐ Stainless steel open base with rack guides and shelf
- ☐ Direct connect vent
- ☐ Back enclosure (stainless steel)
- ☐ 3/4" gas flex hose & quick disconnect
- ☐ 208 or 240 volt, single phase motor (please specify)
- ☐ 50 cycle components
- ☐ Maximum security package available contact factory for details

Specifications:

Garland Master Full-Size Standard Depth, prefix MCO-GS or Deep Depth, prefix MCO-GD, gas convection oven. 60,000 BTU (17.6 kW)/cavity, 3/4 HP fan motor with two speed fan control. Electronic spark ignition. Natural or propane gas. Master 200 solid state control with electromechanical timer. Porcelain enameled oven interior with coved corners, Six (6) oven racks and 13-position rack guides. All model interiors are 29" (736mm) W by 24" (610mm) H, depth is 24" (610mm) for standard depth and 28" (711mm) for deep depth. Stainless steel front, sides, top, and legs. 60/40 dependent door design with double pane thermal window in both doors and interior lighting. Models with suffix -20-S are double deck units. Specify voltage if other than 115 volt, 60 Hz, 1 phase. UL, CUL Gas-Fired and NSF Listed.

GAS-FIRED UL LISTED

GAS-FIRED c UL LISTED

NSF

Garland Commercial Ranges Ltd
1177 Kamato Road,
Mississauga, Ontario
L4W 1X4 CANADA

General Inquiries 1-905-624-0260
USA Sales, Parts and Service 1-800-424-2411
Canadian Sales 1-888-442-7526
Canada or USA Parts/Service 1-800-427-6668

Manitowoc

Garland

Master Gas Convection Oven

SINGLE-DECK MODELS	INT. DIMENSIONS: In mm			EXT. DIMENSIONS: In mm			SHIP WT.	SHIP DIM.
	W	H	D	W	H	D	lbs/kg	cubic Ft.
Standard Depth	29 (736)	24 (610)	24 (610)	38 (965)	57-1/2 (1461)	41-1/4(1048)	515/230	64
Deep Depth	29 (736)	24 (610)	28 (711)	38 (965)	57-1/2 (1461)	44-1/2(1130)	545/245	64

DOUBLE-DECK MODELS	INT. DIMENSIONS: In mm			EXT. DIMENSIONS In mm			SHIP WT.	SHIP DIM.
	W	H	D	W	H *	D	2@lbs/kg	Cubic Ft.
Standard Depth	29 (736)	24 (610)	24 (610)	38 (965)	70-1/2 (1791)	41-1/4(1048)	1030/465	128
Deep Depth	29 (736)	24 (610)	28 (711)	38 (965)	70-1/2 (1791)	44-1/2(1130)	1090/490	128

*Height with or without standard casters. Height with low profile casters (double deck) is 68-1/2" (1740mm).

MODELS	INPUT RATINGS, NAT & PRO			ELECTRICAL SPECIFICATIONS	
	BTU/hr	kW Eqiv.	Gas inlet	120V/1Ph.	240V/1Ph.
Single Deck	60,000	17.6	(1)@3/4" NPT	(1)@9.8A	(1)@5.2A
Double Deck	120,000	35.2	(1)@1" NPT	(2)@9.8A	(2)@5.2A

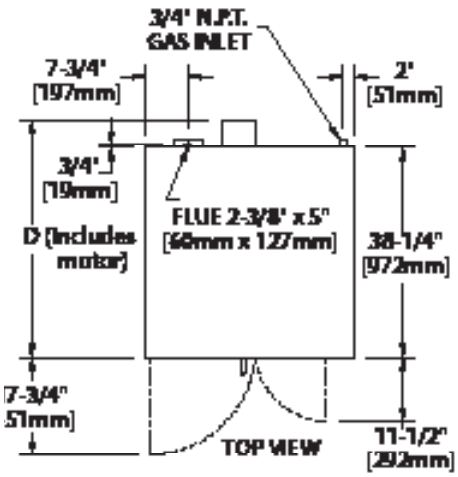

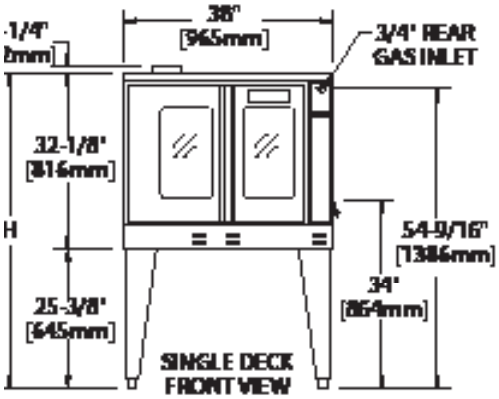

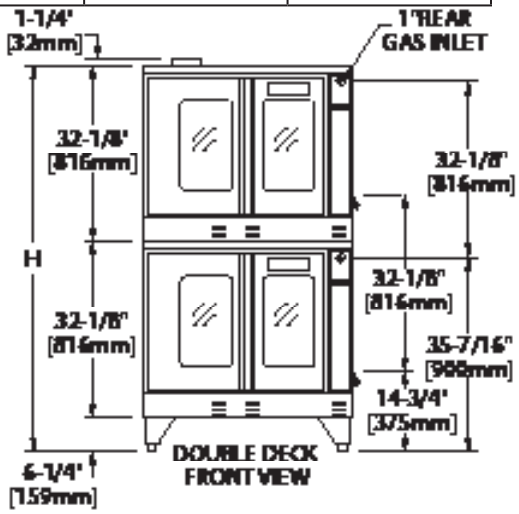

Installation Notes:

Combustible Wall Clearances:
*Sides: 1" (25mm)
Back: 3" (76mm)
***Note: Installations beside units with high heat sources it is recommended to leave 6" (152mm) on the right side of oven. Refer to the installation manual for more detail.**

Entry Clearance:
Crated: 47" (1194mm)
Uncrated: 32½" (826mm)

Manifold Operating Pressure:
Natural: 4.5" WC (11 mbar)
Propane: 10" WC (25 mbar)
Max 13.8" WC @ 70°F
NOTE: Data applies only to North America

Gas Input Ratings shown here are for installations up to 2,000 ft. (610m) above sea level. Specify altitudes over 2,000 ft. Please specie- gas type when ordering.

Notes:
1. Standard electrical specifications include motor requirements.
2. (120V units) 115V, 3/4 HP, 2-speed motor; 1140 and 1725 rpm, 60Hz.
3. (240V units) 200-240V, 3/4 HP, 2-speed motor; 1140 and 1725 rpm, 60 Hz
4. A 6 ft. line cord is provided for each 120V deck with a (NEMA #5-15P) plug.

Form# MCO10S (04/14/15)

Garland Commercial Ranges Ltd
1177 Kamato Road,
Mississauga, Ontario
L4W 1X4 CANADA

General Inquiries 1-905-624-0260
USA Sales, Parts and Service 1-800-424-2411
Canadian Sales 1-888-442-7526
Canada or USA Parts/Service 1-800-427-6668

Manitowoc