U.S. Range

U Series 36" Gas Restaurant Range

Item: _____

Quantity: _____

Project: _____

Approval: _____

Date: _____

U Series 36" Gas Restaurant Range

Models:

- ☐ U36-6R
- ☐ U36-6S
- ☐ U36-4G12R
- ☐ U36-4G12S
- ☐ U36-2G24R
- ☐ U36-2G24S
- ☐ U36-G36R
- ☐ U36-G36S

Model U36-6R

NOTE: Ranges supplied with casters must be installed with an approved restraining device.

Standard Features:

- Large 27" (686mm) work top surface
- Stainless steel front and sides
- Stainless steel 5" (127mm) plate rail
- Stainless steel backguard, w/removable stainless steel shelf
- 12" (305mm) section stamped drip trays w/ dimpled bottom
- 6" (152mm) adj. stainless steel legs
- Large easy-to-use control knobs
- Gas regulator

Standard on Applicable Models:

- Cabinet base in lieu of oven, suffix S
- Ergonomic split cast iron top ring grates
- Powerful 32,000 Btuh/ 9.37 kW 2 piece cast iron geometric open top burner
- 5/8" (15mm) thick steel griddle plate w/manual hi/lo valve control, 23" (584mm) working depth surface, Standard on right, optional on left
- 4-1/4" (108mm) wide grease trough
- 18,000 Btuh/5.27 kW cast iron "H" style griddle burner per 12"(305mm) width of griddle
- 38,000 Btuh/ 11.13 kW cast iron "H" style oven burner
- Snap action modulating oven thermostat low to 500° F
- Large porcelain ribbed oven bottom & door, aluminized steel top, sides and back; oven fits standard sheet pans in both directions for standard ovens
- Strong, keep-cool oven door handle
- Nickel plated oven rack and 3-position removable oven rack guide
- Convection oven w/3 nickel plated oven racks and removable rack guides in lieu of standard oven w/ 1/3HP 120v 60 Hz single phase fan motor; change suffix R to C

Optional Features:

- ☐ Convection oven motor 240v 50/60HZ single phase
- ☐ Snap action modulating griddle control 175° to 425° F
- ☐ Grooved griddle in 1/2 or full plate section widths
- ☐ Hot top 12" (305mm) plate in lieu of two open burners, manual valve controlled w/18,000 Btuh/5.27 kW cast iron "H" burner standard on left side
- ☐ Low profile 9-3/8" (238mm) backguard stainless steel front and sides
- ☐ Stainless steel back for high shelf, low profile backguard or range
- ☐ Additional oven racks
- ☐ 6" (152mm) levelling swivel casters (4), w/front locking
- ☐ Flanged deck mount legs
- ☐ Two stainless steel doors for storage base models
- ☐ Intermediate stainless steel shelf for storage base models
- ☐ Celsius temperature dials
- ☐ Piezo spark ignition for pilots on griddles

Specifications:

Gas restaurant series range with large capacity (standard) oven. 35 7/16" (900mm) wide with a 27" (686mm) deep work top surfaces. Stainless steel front, sides and 5" wide front rail. 6" (152mm) legs with adjustable feet. Six powerful 2 piece 32,000 Btuh/9.37 kW (Natural Gas), cast open burners set in split cast iron ergonomic grates. Griddle or optional hot-top with cast iron "H" style burners, 18,000 Btuh/5.27 kW (natural gas), in lieu of open burners. Porcelain oven bottom and door liner. Durable heavy duty oven door w/ "keep cool" handle. Heavy cast iron "H" oven burner rated 38,000 Btuh/11.13 kW (natural gas) Oven controlled by even bake, fast recovery snap action modulating oven thermostat. Available with convection oven or storage base in lieu of standard oven.

C US

Garland Commercial Ranges Ltd.
1177 Kamato Road,
Mississauga, Ontario
L4W 1X4 CANADA

General Inquires 1-905-624-0260
USA Sales, Parts and Service 1-800-424-2411
Canadian Sales 1-888-442-7526
Canada or USA Parts/Service 1-800-427-6668

Manitowoc

U.S. Range

U Series 36" Gas Restaurant Range

Model Number	Description	Total BTU/Hr Natural	Shipping Information		
			Lbs.	Kg	Cu Ft [2]
U36-6R[1]	Six Open Burners w/26" Oven	230,000	430	195	37
U36-6S	Six Open Burners w/Storage Base	192,000	310	141	37
U36-4G12R[1]	12" Griddle, Four Open Burners w/26" Oven	184,000	460	209	37
U36-4G12S	12" Griddle, Four Open Burners w/Storage Base	146,000	340	154	37
U36-2G24R[1]	24" Griddle, Two Open Burners w/26" Oven	138,000	495	225	37
U36-2G24S	24" Griddle, Two Open Burners w/Storage Base	100,000	375	170	37
U36-G36R[1]	36" Griddle w/26" Oven	92,000	530	240	37
U36-G36S	36" Griddle w/Storage Base	54,000	410	186	37

[1] Available with convection oven change R to C [2] Ranges with convection ovens "C" are 57 Cu Ft

Width In (mm)	Depth[3] In (mm)	Height w/shelf In (mm)	Oven Interior-in (mm)			Combustible Wall Clearance-In (mm)		Entry Clearances In (mm)		Manifold Operating Pressure	
			Height	Depth[4]	Width	Sides	Rear	Crated	Uncrated	Natural	Propane
35-7/16 (900)	34-1/2 (876)	57 (1448)	13 (330)	26 (660)	26-1/4 (667)	14 (356)	6 (152)	37 (940)	36-1/2 (927)	4.5" WC 11 mbar	10" WC 25 mbar

[3] Convection oven base models add 3 7/8" (98mm) to the depth of the unit. [4] Convection oven depth 22" (559mm)

Gas input ratings shown for installations up to 2000 ft.,(610m) above sea level. Please specify altitudes over 2000 ft.

Burner Ratings (BTU/Hr/kW)			
Gas Type	Open Top	Griddle/ Hot Top	Standard Oven or Convection
Natural	32,000/9.37	18,000/5.27	38,000/11.13
Propane	26,000/7.61	18,000/5.27	32,000/9.38

Note: Installation clearance reductions are applicable only where local codes permit.

This product is not approved for residential use.

Convection ovens with 120V, 60 Hz, 1 phase, 3.4 amps motors are supplied with 6'/1829mm cord and plug (NEMA 5-15P); 240V ,50/60 Hz, 1 phase motors are not supplied with cord and plug and must have direct connect.

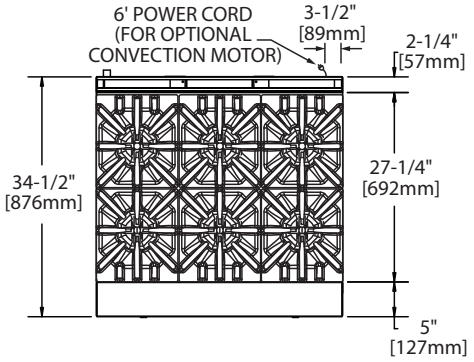

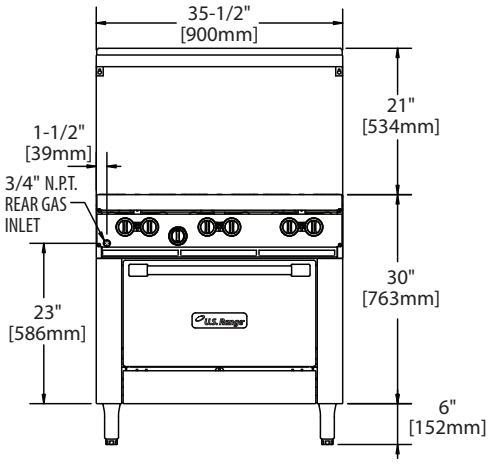

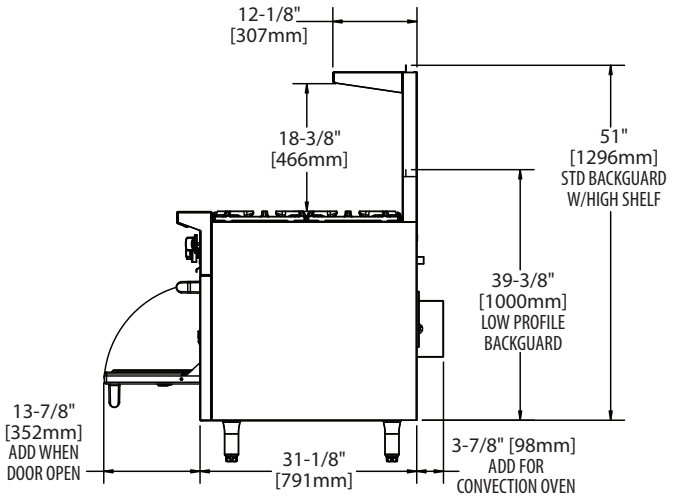

Form# U36 Series (07/29/11)

Garland Commercial Ranges Ltd.
1177 Kamato Road,
Mississauga, Ontario
L4W 1X4 CANADA

General Inquires 1-905-624-0260
USA Sales, Parts and Service 1-800-424-2411
Canadian Sales 1-888-442-7526
Canada or USA Parts/Service 1-800-427-6668

Manitowoc