U.S. Range

Polar Cuisine Remote Refrigerated Or Freezer Base

Item: _____

Quantity: _____

Project: _____

Approval: _____

Date: _____

Polar Cuisine Remote Refrigerated Or Freezer Base

Models:

REFRIGERATION UNITS

- ☐ UN17R36
- ☐ UN17R48
- ☐ UN17R54
- ☐ UN17R60
- ☐ UN17R66
- ☐ UN1732R72
- ☐ UN171927R72
- ☐ UN17R84
- ☐ UN17R90
- ☐ UN17R96
- ☐ UN17R102
- ☐ UN17R108
- ☐ UN17R114
- ☐ UN17R120

FREEZER UNITS

- ☐ UN17FR36
- ☐ UN17FR48
- ☐ UN17FR54
- ☐ UN17FR60
- ☐ UN17FR66
- ☐ UN17FR72

Remote Refrigerated Base shown with optional casters

Standard Features

- Stainless steel exterior front and sides
- ABS interior door front and cabinet sides, stainless steel interior top, rear and bottom
- Santoprene magnetic door gasket
- Heavy-duty stainless steel drawer slides with stainless steel bearings.
- Center located, flush mounted handle
- Front face mounted scroll type thermometer
- 6" (152mm) mechanical with removable front panel for all refrigerant and electrical connections
- 6" (152mm) adjustable legs
- Vertically mounted blower coil, HFC-404A refrigerant
- Removable track assembly drawers with a 10 year warranty for parts
- Standard drawers with mullion between drawers accommodates 12"x 20" x 4" deep hotel pans

Note: Compressor by others. Unit must be hard wired on site

Optional Features:

- ☐ Extra deep drawers with out mullion to accommodate 6" deep hotel pans (150mm deep Gn 1/1 pans)
- ☐ Casters
- ☐ Doors and tray racks to accommodate sheet pans in lieu of drawers, N/A on 32" drawers

Specifications:

US Range low height Remote Refrigerated or Freezer Base to be exclusively used under US Range Heavy Duty Cuisine Series modular tops. Stainless steel exterior front and sides. ABS interior door front and cabinet sides, and stainless steel interior top, rear and bottom. Santoprene magnetic door gasket. Galvanized steel bottom and back of base. CFC free foamed in place insulation. Removable stainless steel roller drawer assembly with self lubricating rollers. Roller assemblies carry a 10 year parts warranty. Standard drawers accommodate 12" x 20" x 4" deep hotel pans. HFC-404A refrigerant refrigeration system supplied with electric condensate evaporator, solenoid and thermostat. Units must be hard-wired on site. Vertically mounted blower coil on inside cabinet. 6" (152mm) mechanical section for all refrigerant, and electrical connections. Units equipped with scroll type thermometer. 6" (152mm) adjustable legs standard.

NOTE: Bases suppled with casters must be installed with an approved restraining device.

Garland Commercial Ranges Ltd.
1177 Kamato Road,
Mississauga, Ontario
L4W 1X4 CANADA

General Inquires 1-905-624-0260
USA Sales, Parts and Service 1-800-424-2411
Canadian Sales 1-888-442-7526
Canada or USA Parts/Service 1-800-427-6668

Manitowoc

U.S. Range

DRAWER CONFIGURATIONS

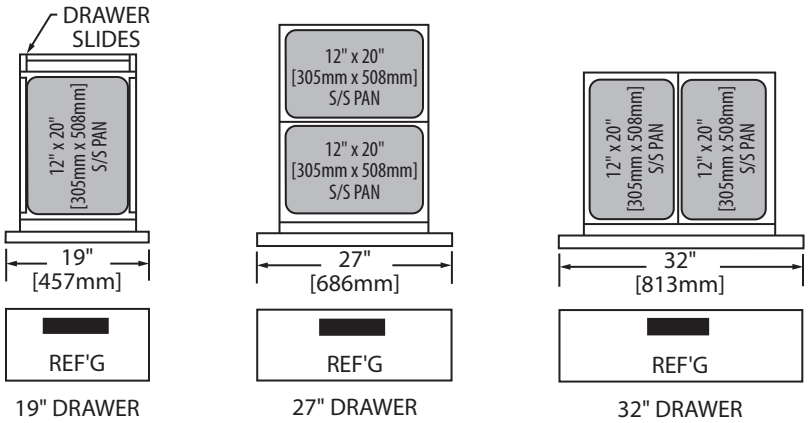

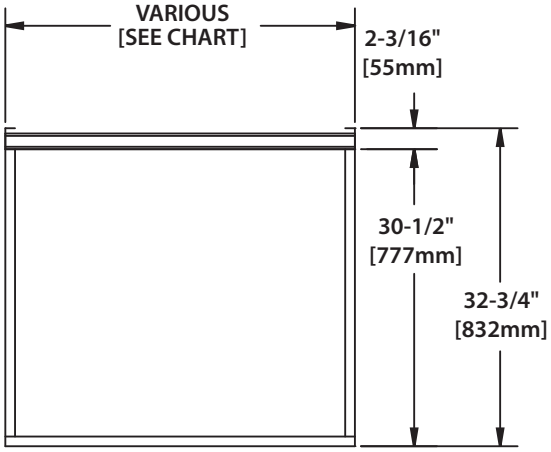

NOTE : All Bases must be order with Cuisine Series or combination of Cuisine Series Modular tops Only. Please specific when ordering modular tops if they are for refrigerated base mount.

U.S. Range products are not approved or authorized for home or residential use, but are intended for commercial applications only. U.S. Range will not provide service, warranty, maintenance or support of any kind other than in commercial applications.

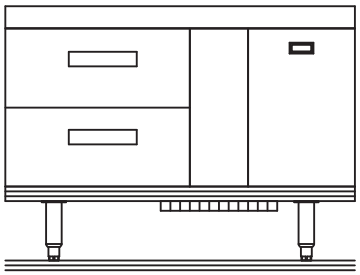

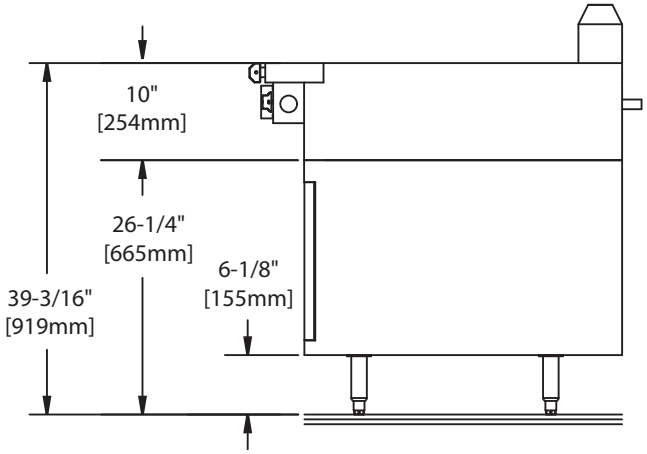

Garland Commercial Ranges Ltd.
1177 Kamato Road,
Mississauga, Ontario
L4W 1X4 CANADA

General Inquires 1-905-624-0260
USA Sales, Parts and Service 1-800-424-2411
Canadian Sales 1-888-442-7526
Canada or USA Parts/Service 1-800-427-6668

Manitowoc

Remote Refrigerators

Base Configuration (Left to Right)

Model Number	Length In (mm)	Depth In (mm)	Height In (mm)	Draw Size Openings (2 drawers per section)			Full Size Hotel Pans
				19"	27"	32"	
UN17R36	36 (914)	32-3/4 (832)	26-3/16 (665)	1			2
UN17R48	48 (1219)	32-3/4 (832)	26-3/16 (665)			1	4
UN17R54	54 (1312)	32-3/4 (832)	26-3/16 (665)	1	1		6
UN17R60	60 (1524)	32-3/4 (832)	26-3/16 (665)		2		8
UN17R66	66 (1676)	32-3/4 (832)	26-3/16 (665)		1	1	8
UN1732R72	72 (1829)	32-3/4 (832)	26-3/16 (665)			2	8
UN171927R72	72 (1829)	32-3/4 (832)	26-3/16 (665)	2	1		8
UN17R84	84 (2134)	32-3/4 (832)	26-3/16 (665)	1	1	1	10
UN17R90	90 (2286)	32-3/4 (832)	26-3/16 (665)	1		2	10
UN17R96	96 (2428)	32-3/4 (832)	26-3/16 (665)		2	1	12
UN17R102	102 (2591)	32-3/4 (832)	26-3/16 (665)			3	12
UN17R108	108 (2743)	32-3/4 (832)	26-3/16 (665)	2		2	12
UN17R114	114 (2896)	32-3/4 (832)	26-3/16 (665)		4		16
UN17R120	120 (3048)	32-3/4 (832)	26-3/16 (665)		4		16

Remote Freezer

Base Configuration (Left to Right)

Model Number	Length In (mm)	Depth In (mm)	Height In (mm)	Draw Size Openings (2 drawers per section)			Full Size Hotel Pans
				19"	27"	32"	
UN17FR36	36	32-3/4	26.19	1			2
UN17FR48	48	32-3/4	26.19			1	4
UN17FR54	54	32-3/4	26.19	2			4
UN17FR60	60	32-3/4	26.19	1	1		6
UN17FR66	66	32-3/4	26.19		2		8
UN17FR72	72	32-3/4	26.19		1	1	8

Garland Commercial Ranges Ltd.
1177 Kamato Road,
Mississauga, Ontario
L4W 1X4 CANADA

General Inquires 1-905-624-0260
USA Sales, Parts and Service 1-800-424-2411
Canadian Sales 1-888-442-7526
Canada or USA Parts/Service 1-800-427-6668

Manitowoc

U.S. Range

Polar Cuisine Remote Refrigerated Or Freezer Base

Remote Refrigerators

Base Configuration (Left to Right)

Model Number	Agency Reference Model #	H.P.	BTU	Volts/ Amps	Cu.FT. (crate)	Ship Weight lb/kg
UN17R36	000-201TP4T1	1/5*	233	115/3	30	247/112
UN17R48	000-201TP4T2	1/5*	373	115/3	40	322/146
UN17R54	000-201TP4T3	1/5*	410	115/3	45	355/116
UN17R60	000-201TP4T4	1/5*	432	115/3	47	361/164
UN17R66	000-201TP4T5	1/5*	536	115/3	52	431/196
UN1732R72	000-201TP4T6	1/5*	572	115/3	56	458/208
UN171927R72	000-201TP4T7	1/5*	675	115/3	56	533/242
UN17R84	000-201TP4T8	1/4*	756	115/6	67	570/268
UN17R90	000-201TP4T9	1/4*	815	115/6	73	607/276
UN17R96	000-201TP4TA	1/4*	852	115/6	77	637/280
UN17R102	000-201TP4TB	1/4*	889	115/6	81	675/306
UN17R108	000-201TP4TC	1/4*	918	115/6	85	720/327
UN17R114	000-201TP4TD	1/4*	977	115/6	90	750/340
UN17R120	000-201TP4TE	1/4*	990	115/6	95	770

Remote Freezer

Base Configuration (Left to Right)

Model Number	Agency Reference Model #	H.P.	BTU	Volts/ Amps	Cu.FT. (crate)	Ship Weight lb/kg
UN17FR36	000-201TP4TR	1/3*	995	115/10	30	247/112
UN17FR48	000-201TP4TG	1/3*	995	115/10	40	322/146
UN17FR54	000-201TP4TH	1/2*	1116	115/10	45	355/116
UN17FR60	000-201TP4TI	3/4*	1116	115/10	47	361/164
UN17FR66	000-201TP4TJ	3/4*	1399	115/10	52	431/196
UN17FR72	000-201TP4TK	3/4*	1461	115/10	56	533/242

*Recommended HP Compressor and connection by others.

Cord and plug not supplied, unit must be hard wired

Form# PCR (08/17/11)

Garland Commercial Ranges Ltd.
1177 Kamato Road,
Mississauga, Ontario
L4W 1X4 CANADA

General Inquires 1-905-624-0260
USA Sales, Parts and Service 1-800-424-2411
Canadian Sales 1-888-442-7526
Canada or USA Parts/Service 1-800-427-6668

Manitowoc