BKI®

Fresh ideas in foodservice equipment

Holds Pre-Packaged Food for up to 4 Hours!!

HSS

Hot Self Serve

Multi-Tier Merchandiser with Heated Air Curtain

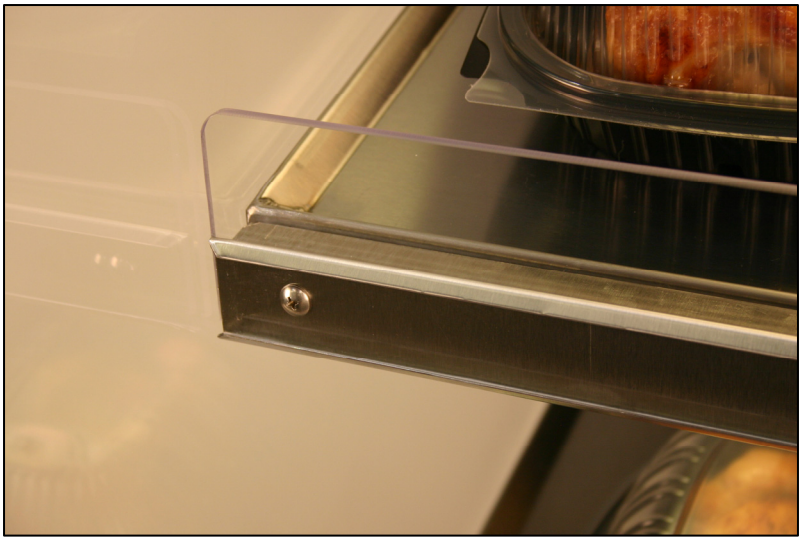

- **Heated Shelves With Independent Temperature Control**
- **Stainless Steel Shelf Top With Marine Edge Retains Spills**
- **24” (620 mm), 36” (914 mm) & 48” (1220 mm) Widths**
- **Ambient Barrier With Heated Air Curtain Maintains Temperature & Freshness of Pre-Packaged Foods At Ambient Temperatures As Low As 60°F (15°C)**
- **Slanted Shelves For Better Product Presentation**
- **Pricing Tag Rails**
- **Fluorescent Lamp Above Each Shelf**
- **Durable Tempered Glass End Panels**

Mechanical Specifications:

	Unit Dimensions			
Model	**Width**	**Depth**	**Shelf Config.**	**Height**
HSS2	24 3/16 in (615 mm)	38 in (965 mm)	-2	49 15/32 in (1257 mm)
			-3 & -4S	69 11/16 in (1770 mm)
			-4T & -5	79 3/16 in (2011 mm)
HSS3	36 3/16 in (920 mm)	38 in (965 mm)	-2	49 15/32 in (1257 mm)
			-3 & -4S	69 11/16 in (1770 mm)
			-4T & -5	79 3/16 in (2011 mm)
HSS4	48 3/16 in (1224 mm)	38 in (965 mm)	-2	49 15/32 in (1257 mm)
			-3 & -4S	69 11/16 in (1770 mm)
			-4T & -5	79 3/16 in (2011 mm)

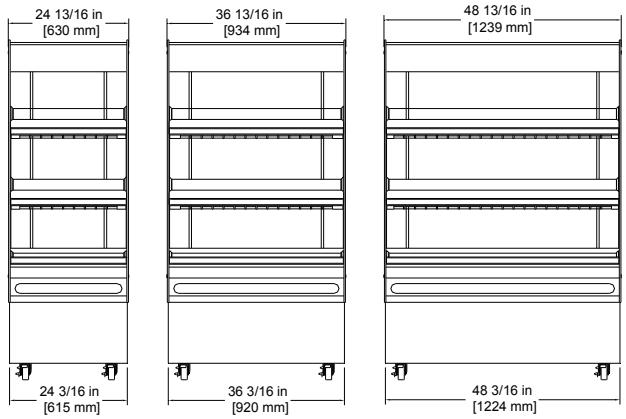

HSS2 HSS3 HSS4

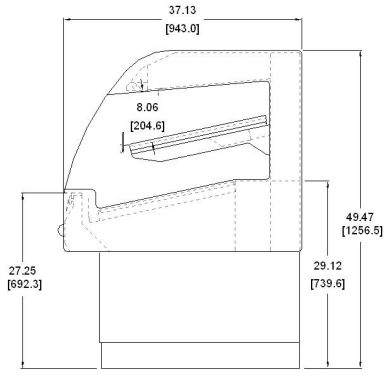

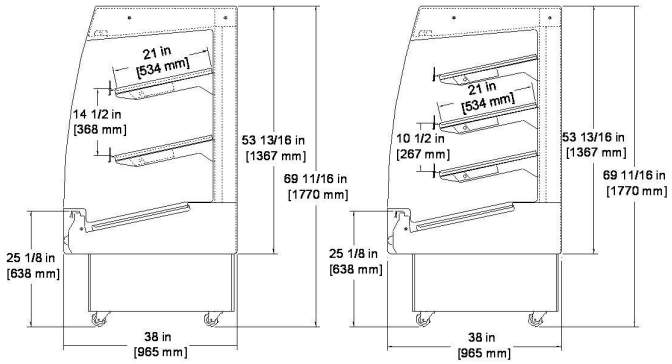

3 SHELVES (-3) 4 SHELVES (-4S)

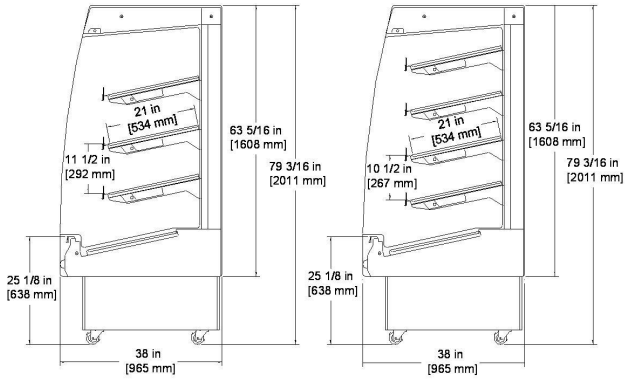

4 SHELVES (-4T) 5 SHELVES (-5)

Crated Dimensions:

	Unit Dimensions				
Model	**Width**	**Depth**	**Shelf Config.**	**Height**	**Weight**
HSS2	32 1/2 in (826 mm)	46 in (1168 mm)	-2	62 in (1575 mm)	460 lbs. (209 kg)
			-3 & -4S	80 in (2032 mm)	535 lbs. (243 kg)
			-4T & -5	89 in (2261 mm)	560 lbs. (254 kg)
HSS3	44 1/2 in (1130 mm)	46 in (1168 mm)	-2	62 in (1575 mm)	524 lbs. (238 kg)
			-3 & -4S	80 in (2032 mm)	607 lbs. (275 kg)
			-4T & -5	89 in (2261 mm)	640 lbs. (290 kg)
HSS4	56 1/2 in (1435 mm)	46 in (1168 mm)	-2	62 in (1575 mm)	570 lbs. (259 kg)
			-3 & -4S	80 in (2032 mm)	670 lbs. (304 kg)
			-4T & -5	89 in (2261 mm)	720 lbs. (327 kg)

Electrical Specifications:

Model					HSS2		HSS3		HSS4	
Shelf Config.	Volts	Phase	Cycles	Wires	Watts	Amps	Watts	Amps	Watts	Amps
-2	208	1	50/60 Hz	2 + G	2183	10.5	3452	16.6	4326	20.8
	220	1	50/60 Hz	2 + G	2320	10.5	3678	16.7	4595	20.9
	230	1	50/60 Hz	2 + G	2536	11.0	4020	17.5	5022	21.8
	240	1	50/60 Hz	2 + G	2761	11.5	4377	18.2	5468	22.8
-3	208	1	50/60 Hz	2 + G	2483	11.9	3902	18.8	4926	23.7
	220	1	50/60 Hz	2 + G	2595	11.8	4090	18.6	5144	23.4
	230	1	50/60 Hz	2 + G	2836	12.3	4470	19.4	5622	24.4
	240	1	50/60 Hz	2 + G	3088	12.9	4867	20.3	6122	25.5
-4S -4T	208	1	50/60 Hz	2 + G	2784	13.4	4352	20.9	5526	26.6
	220	1	50/60 Hz	2 + G	2870	13.0	4502	20.5	5693	25.9
	230	1	50/60 Hz	2 + G	3136	13.6	4920	21.4	6222	27.1
	240	1	50/60 Hz	2 + G	3415	14.2	5357	22.3	6775	28.2
-5	208	1	50/60 Hz	2 + G	3084	14.8	4802	23.1	6126	29.5
	220	1	50/60 Hz	2 + G	3144	14.3	4913	22.3	6242	28.4
	230	1	50/60 Hz	2 + G	3436	14.9	5370	23.3	6822	29.7
	240	1	50/60 Hz	2 + G	3741	15.6	5847	24.4	7428	31.0

Capacities:

	Capacity per Shelf				Total Capacity			
Model	Width	Depth	Area	Chicken Domes	-2	-3	-4S/ -4T	-5
HSS2	23 in (584 mm)	21 1/2 in (546 mm)	3.43 sq ft (22.1 sq cm)	6	12	18	24	30
HSS3	35 in (889 mm)	21 1/2 in (546 mm)	5.22 sq ft (33.7 sq cm)	8	16	24	32	40
HSS4	47 in (1194 mm)	21 1/2 in (546 mm)	7.02 sq ft (45.3 sq cm)	12	24	36	48	60

Agency Approvals:

BKI North America
PO Box 80400
Simpsonville, SC 29680-0400 USA
Telephone: (864) 963-3471
Toll Free: (800) 927-6887

BKI Europe
Theale Technology Centre
Station Road – Theale
Reading – West Berkshire – RG7 4AA
Telephone: 0870 9904242
Fax: 0870 9904243

Standex
Cooking Solutions Group