Item No. _____

Rotisserie/Convection Oven Combination

Model: VGG-COq

Fresh ideas in foodservice equipment

VGG-8 Rotisserie Oven with COq Convection Oven

When space is a prime consideration, BKI's two-in-one VGG-Coq high volume combination Rotisserie/Convection Oven is the smart solution. Versatile and attractive, this hardworking unit gives supermarket delis double duty flexibility to cook and bake a wide array of delicious foods without taking up additional floor space. Overall height of this unit is only 73-1/16” which allows oven to easily fit underneath existing exhaust hoods. BKI’s VGH Ventless Hood is also available for use with in conjunction with VGG-COq if required. Its curved glass front is designed with merchandising in mind offers excellent product visibility. Plus, the VGG touch screen controller lets you store up to fifteen custom multi-stage programs for flexible cooking options with lockouts to ensure programs remain consistent. The VGG-COq is quality from top to bottom. The rotisserie cooks meats–up to 40 three-pound chickens in just 75 minutes–without high maintenance quartz tubes, while the convection oven bakes hot foods such as whole chickens & pieces, proteins, entrees, and vegetables to perfection. The VGG-COq is easy to service and features a cool-door design for added safety which is also available in pass-thru version compatible with service case line-up.

Agency Approvals:

VGH

VGG-Coq

Equipment Dimensions:

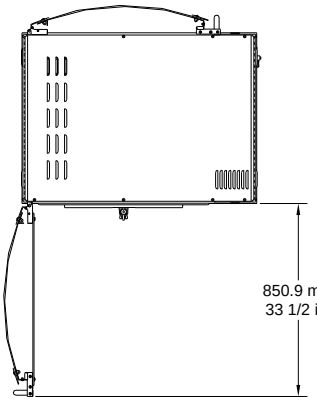

TOP VIEW

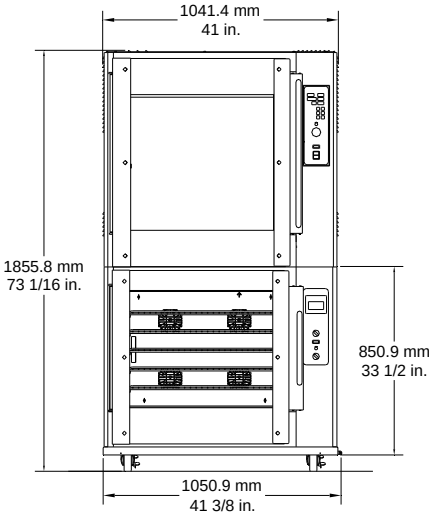

FRONT VIEW

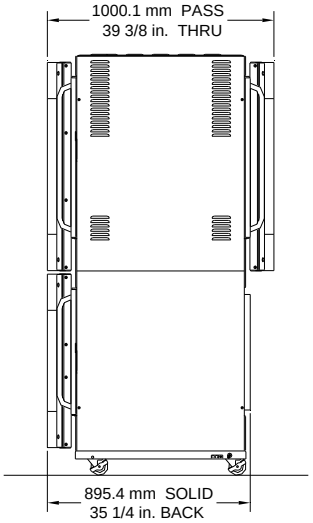

RIGHT SIDE VIEW

Mechanical Specifications:

Dimension	Uncrated	Crated
Height	73 1/16” (1855.8 mm)	85” (2162.8 mm)
Width	41 3/8” (1050.9 mm)	45.5” (1157.8 mm)
Depth	39 3/8” (1000.1 mm)	43” (1094.1 mm)
Floor Space	11.3 sq. ft. (1.05 sq. m)	13.6 sq. ft. (1.26 sq. m)
Weight	890 lb. (428.6 kg)	920 lb. (417.3 kg)

Electrical Options:

VGG					
Volts	**Amps**	**KW**	**Breaker**	**Wires**	**Phase**
208	29.7*	10.6*	40*	3	3
240	28.7*	11.8*	40*	3	3
COq					
Volts	**Amps**	**KW**	**Breaker**	**Wires**	**Phase**
208	28.5*	10.2*	40*	3	3
240	27.0*	11.1*	35*	3	3
* Ratings per oven cavity – a separate power supply is required for each oven cavity					

Accessories

- BASKET, MEAT CHICKEN 4 GOOSERS (MB0037)
- MEAT BASKET (MB0038)
- MEAT FORK 27.1875 (MF0032)
- VEE SPIT (MF0038)
- 13” insulating mitts (G0052)

Options

- Pass-thru or solid back (VGG)
- Flat or curved glass
- Standalone VGG-8 Rotisserie – Specify VGG-8
- Standalone Convection Oven – Specify COq

BKI North America
PO Box 80400
Simpsonville, SC 29680-0400 USA
Telephone: (864) 963-3471
Toll Free: (800) 927-6887

BKI Europe
Theale Technology Centre
Station Road • Theale
Reading • West Berkshire • RG7 4AA
Telephone: 0870 9904242 • Fax: 0870 9904243

Standex
Food Service Equipment Group

© BKI LI0133/08-06 Specifications subject to change without notice.
Printed in the U.S.A.