Item # _____

Quantity _____

C.S.I. Section 11400

HOBART
701 S Ridge Avenue, Troy, OH 45374
1-888-4HOBART • www.hobartcorp.com

3813/3813N SLICER

STANDARD FEATURES

- Removable Knife Capable
- Removable Knife (3813)
- Non-Removable Knife (3813N)
- Zero Knife Exposure
- Sharpen Knife Indicator Light
- Enduralube™ Carriage Rail System
- Tilting, Removable Carriage System
- Knife Sharpen Button
- Home Start Position
- 13" CleanCut™ Knife
- Top Mounted Borazon Stone Sharpener
- Close To Stop
- Glass Bead Finish on Gauge Plate, Top Knife Cover and Product Tray
- MICROBAN® Antimicrobial Product Protection
- Auto Shutoff
- Double-Action Indexing Barrel Cam
- Gauge Plate Interlock
- Lift Assist Cleaning Leg
- No Volt Release
- Rear Mounted Meat Grip
- Ergonomic Style Handle
- ½ H.P. PSC Knife Drive Motor
- Sanitary Anodized Aluminum Base
- 10 Rib Poly V-Belt Drive System

NSF

c UL us LISTED

MODEL

- ❑ 3813 – Full Featured Manual Slicer with Removable Knife and Tool
- ❑ 3813N – Full Featured Manual Slicer with Non-Removable Knife

ACCESSORIES

- ❑ Knife Removal Tool
- ❑ Full Fence
- ❑ Food Chute
- ❑ Product Deflector
- ❑ 4" Legs

Specifications, Details and Dimensions on Inside and Back.

HOBART

3813/3813N SLICER

KaTom Restaurant Supply, Inc.

HOBART
701 S Ridge Avenue, Troy, OH 45374
1-888-4HOBART • www.hobartcorp.com

SOLUTIONS / BENEFITS

Removable Knife (3813)
Easier cleaning, labor savings
- Knife easily removes with removal tool
- Area within ring guard is open for faster cleaning
- Knife and tool are warewasher safe for easy cleaning and sanitation

Removable Ring Guard Cover
Reduces labor, easier to clean
- Catches product debris around the knife for easy removal during cleaning
- Reduces time to “floss” during cleaning

Zero Knife Exposure
Looking out for the operator
- Knife edge is covered when sharpener is both mounted, removed making cleaning easier
- Gauge plate remains closed during operation of sharpener to keep knife edge covered

Sharpen Knife Indicator Light
Improves performance, reduces cost
- Indicates when to sharpen to reduce slicing with dull knife

Enduralube™ Carriage Rail System
Performance, durability, lower maintenance
- Smooth operation from continuous lubrication of carriage rod
- Replenish only once a year to maintain performance

Exclusive Tilting, Removable Carriage System
Easier to clean, reduces labor
- Tilt design allows for ease of midday cleaning
- Removable for complete cleaning and sanitation

Sharpen Knife Button
Reduces cost of ownership, ease of use
- Reduces over-sharpening and extends knife life
- Eliminates guesswork on correct sharpening length

Home Start Position
Looking out for the operator
- Carriage must be in “home position” before the slicer will start, ensuring tray is in optimal loading position

CleanCut™ Knife
Reduces cost of ownership, improves yield
- Thin edge design improves yield
- Super alloy edge stays sharp longer

Top Mounted Borazon Stone Sharpener
Ease of use, easier cleaning, reduces costs
- Single action sharpens and hones in just five seconds
- Removable and warewasher safe for easy cleaning and sanitation
- Lifetime guaranteed Borazon sharpening stones provide maximum performance with reduced maintenance costs

Close To Stop
Convenience, labor savings, energy savings
- Closing of gauge plate turns off the slicer
- Protects knife edge

Glass Bead Finish on Gauge Plate and Knife Cover
Ease of use, improves performance
- Reduces drag for a smoother slicing motion

MICROBAN® Antimicrobial Product Protection
Easier cleaning
- Inhibits the growth of odor and stain causing organisms on the plastic touch points

Automatic Shutoff
Energy savings
- Knife shuts off after 30 seconds of inactivity to extend motor life and save energy

Double-Action Indexing Barrel Cam
Increases reliability, easier to use
- Indexing numbers are consistent across machines and over time
- The first full revolution of the indexing knob provides precise control for shaving, chipping and thin slicing
- The second revolution opens the gauge plate quickly for thicker slicing

Gauge Plate Interlock
Ease of cleaning
- Gauge plate must be closed to remove or tilt away carriage for cleaning and cannot be opened when product tray is tilted or removed
- Protects knife edge during cleaning procedures

Lift Assist Cleaning Leg
Ease of use and cleaning
- Gas assisted leg helps operator easily lift machine for cleaning underneath

No Volt Release
Looking out for the operator
- Slicer must be restarted if power fails or slicer is unplugged

Rear Mounted Meat Grip
Slicing performance, ease of use
- Opens up front of product tray for unobstructed loading
- Optimizes geometry and weight for better hold

Ergonomic Style Handle
Operator satisfaction
- Comfortable manual operation

½ H.P. PSC Knife Drive Motor
Durability, cost savings
- More efficient design reduces energy cost

Sanitary Anodized Aluminum Base
Easier cleaning, labor savings
- Limited cracks/crevices or bolt holes where product can lodge and bacteria may grow
- Easy cleanup and durable finish

10 Rib Poly V-Belt Drive System
Reduces maintenance, improves efficiency
- Improves energy transfer from motor to knife
- Quieter operation

KaTom Restaurant Supply, Inc.

SPECIFICATIONS

Removable Knife: Knife hub accepts Knife Removal Tool. The tool covers the knife edge when removed (3813). Non-removable knife can be ordered as 3813N.

Removable Ring Guard Cover: Cover fits on top of ring guard to catch food debris. When removed, reveals a 0.12" space between knife and guard for easier flossing. Is durable Celcon™ plastic and can be washed in ware-washer or three compartment sink.

Zero Knife Exposure: Knife edge is not exposed during slicing or recommended cleaning procedures.

Sharpen Knife Indicator Light: Indicator light alerts operator when to sharpen knife. A microprocessor counts the optimal number of carriage strokes before activating an LED on the control panel.

Enduralube™ Carriage Rail System: Enduralube™ ensures optimal lubrication of carriage rail and bearings while requiring only annual oil replenishment.

Tilting, Product Tray Carriage System: Stainless steel and aluminum product tray tilts easily for midday cleaning and is removable for thorough cleaning and sanitation procedures. The carriage has 12½" manual travel.

Knife Sharpen Button: Sharpen button is preset for the optimal sharpening duration to prevent both over and under sharpening.

Home Start Position: Home-start ensures product tray is in a convenient position before starting the slicer.

CleanCut™ 13" Knife: The knife is approximately 13 inches, constructed of 304L stainless steel and high performance Stellite™ alloy. Knife cover is quickly removed with a quarter turn of the spring loaded locking knob mounted directly on the cover.

Top Mounted Borazon Stone Sharpener: Single action operation utilizing two Borazon stones to sharpen and hone in five seconds. Removable, top mounted and warewash safe. When sharpener is removed for cleaning, knife edge is completely shielded. Borazon stones have lifetime guarantee.

Close To Stop: After slicing, a quick turn of the index knob to the closed position turns off the slicer.

Glass Bead Finish on Gauge Plate and Top Knife Cover: Glass bead finish creates micro-dimples in the surface to reduce friction.

MICROBAN® Antimicrobial Product Protection: The Microban additive is built into the external plastic components to inhibit the growth of stain and odor causing organisms. The additive is designed to last the life of the products in which it is incorporated and works continuously to maintain a lower level of odor and stain causing microorganisms. Microban® does not protect the user against food-borne bacteria. Always maintain good hygiene practices.

Automatic Shutoff: Knife motor shuts off after 30 seconds without carriage motion.

Double-Action Indexing Barrel Cam: Index knob moves the gauge plate via a barrel cam ensuring consistent slice thickness across machines and over time. First revolution of index cam for precision slicing; second revolution for thicker slicing selection.

Gauge Plate Interlock: Gauge plate interlock prevents tilt or removal of the product tray when the gauge plate is open and the knife is exposed.

Lift Assist Cleaning Leg: Gas piston helps to both lift and then hold slicer in tilted position for cleaning beneath the machine.

No Volt Release: In the event of power loss, slicer must be restarted before operation can continue.

Ergonomic Style Handle: Specially shaped and positioned for ease of use during manual operation.

½ H.P. PSC Knife Drive Motor: Permanently lubricated ball bearings. Single Permanent Split Capacitor motor (PSC).

Sanitary Anodized Aluminum Base: One-piece base inhibits growth of bacteria in seams, cracks and crevices. Limits holes or crevices in which food can lodge. Durable finish to withstand harsh cleaning products.

10 Rib Poly V-Belt Drive System: Knife is driven by a Poly V belt with ten ribs for optimal efficiency and power transfer.

Finish: Stainless steel product tray, gauge plate and top knife cover. Anodized aluminum base and product tray support arm.

Meat Grip: Rear mounted grip is high strength thermo-plastic. Swings out of way when not in use.

Product Deflector: Deflects large, thick slices off of motor mount. Recommended when slicing product that is both thicker than ⅜" and larger in diameter than 5½".

Electrical Specification: 100-120/60/1.

Switch: Moisture protected membrane, operated by sealed push-button switches.

Slice Thickness: Up to 1¼ inches.

Cord & Plug: 6-foot, three-wire power supply cord and flat plug. Plug not furnished on export models.

Capacity: The product tray will take food up to –
Rectangle: approximately 12" x 6" or
Round: approximately 8" diameter.

Warranty: All parts and service coverage for one year including knife. Lifetime guarantee on Borazon stones in the sharpening system.

Weight: Shipping 135 lbs., Net 103 lbs.

Microban® does not protect the user against food-borne illness. Always maintain good hygiene practices.

KaTom Restaurant Supply, Inc.

HOBART

701 S Ridge Avenue, Troy, OH 45374
1-888-4HOBART • www.hobartcorp.com

DETAILS AND DIMENSIONS

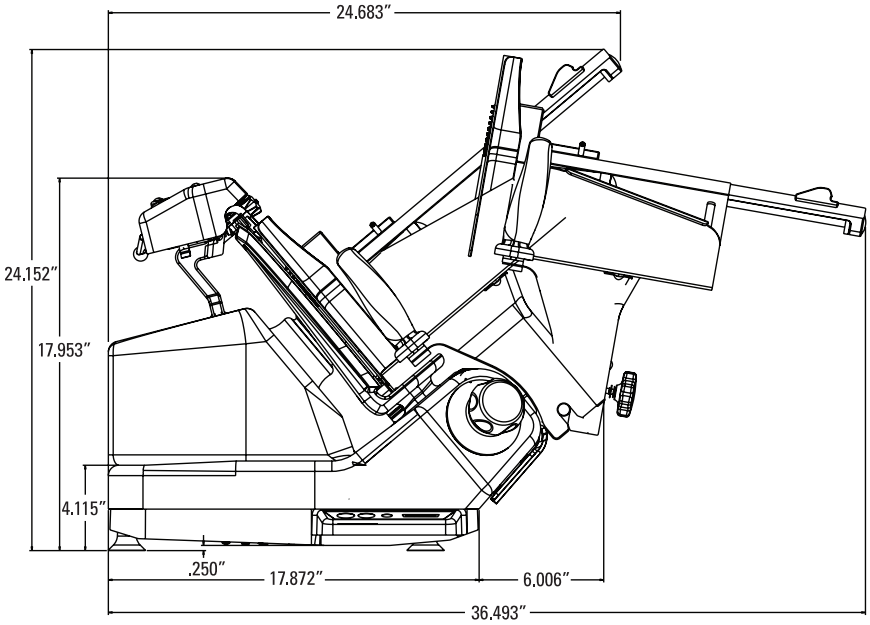

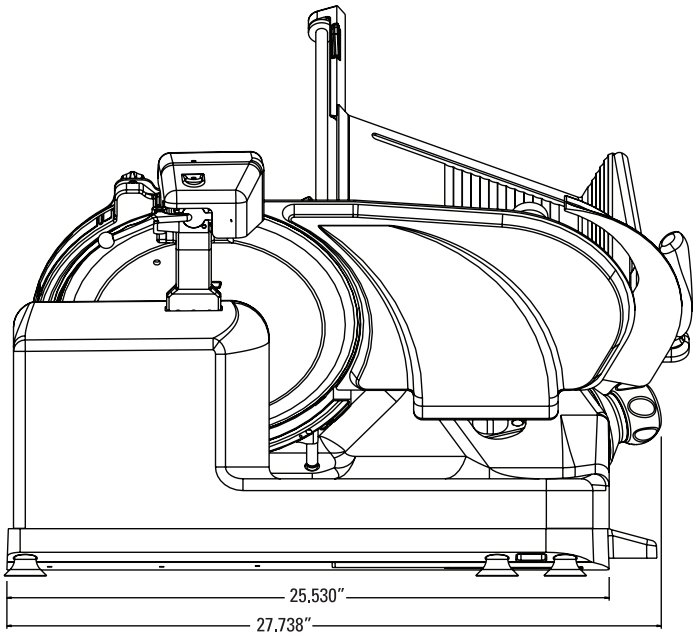

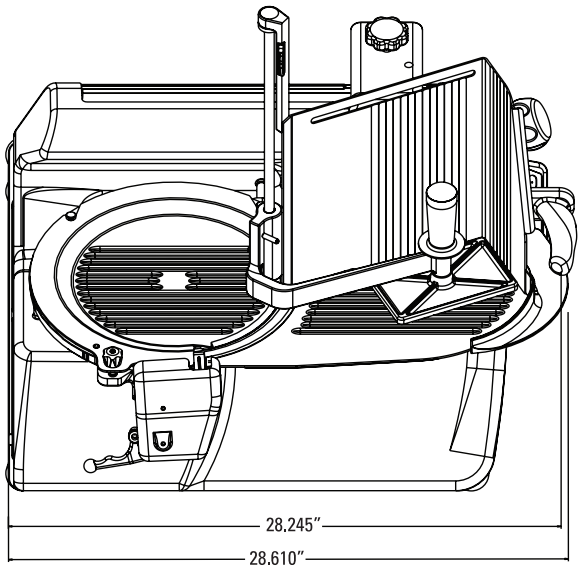

Microban and the Microban symbol are registered trademarks of the Microban Products Company, Huntersville, NC.

As continued product improvement is a policy of Hobart, specifications are subject to change without notice.

KaTom Restaurant Supply, Inc.