Foodservice Equipment

Job_____ Item#_____

ES-6
Countertop Oven/Smoker with Humidity

Shown with Optional Casters

SIZE:
ES-6 - 48-3/8" High, 27-3/8" Wide, 36" Deep
1229 mm High, 696 mm Wide, 915 mm Deep

The ES series of smoker ovens offers the capability to dry bake, bake with moisture, warm, slo-cook, hold and smoke. A minimum footprint is required because of the top mounted motor.

The heat, steam and smoke are distributed evenly throughout the oven cavity by the fan located in the top of the oven. Smoke, steam and heat may be vented out of the top through a ball valve prior to opening the door of the unit when a load of product is completed.

Steam is generated internally by using the same elements that generate the heat. This eliminates the need for a boiler or reservoir. Set the humidity dial to the desired setting. The greater the number the more steam/humidity.

Since each control is independent, a variety of different conditions may be utilized in processing products. The use of all controls will produce a warm, tender, moist product.

CONSTRUCTION:
- Stainless steel construction
- Fully insulated
- Control panel provides access from front of unit and through top
- Heating elements accessible inside and top of unit

CONTROLS:
- Solid state controls
- Fan on/off switch
- Indicator light for thermostat
- Cook'n Hold feature utilizes cook thermostat, hold thermostat and 24 hour timer
- Smoke on/off switch
- Separate heat and humidity controls

STANDARD FEATURES:
- Stainless steel construction
- 6" stainless steel legs
- AutoMist humidity system
- Top ball valve for steam and smoke release
- Cook'n Hold
- Variable moisture control
- Includes 5 chrome racks
- Stainless steel door

OPTIONAL FEATURES:
- Casters
- Additional chrome racks
- Stainless steel cart or stand with or without pan slides
- External smoke box

LABORATORY CERTIFICATION AND APPROVAL

Toastmaster® 10 Sunnen Dr. St. Louis, MO 63143• www.toastmastercorp.com
Toll Free: 1-800-264-7827 • Telephone: 1-314-781-2777 • Toll Free Fax: 1-800-264-6666 • Fax: 314-781-3636

ES-6
Countertop Oven/Smoker with Humidity

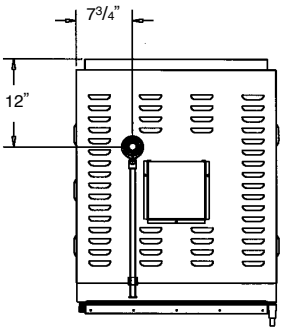

TOP

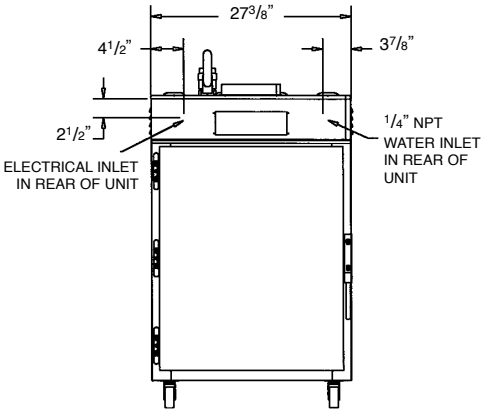

FRONT

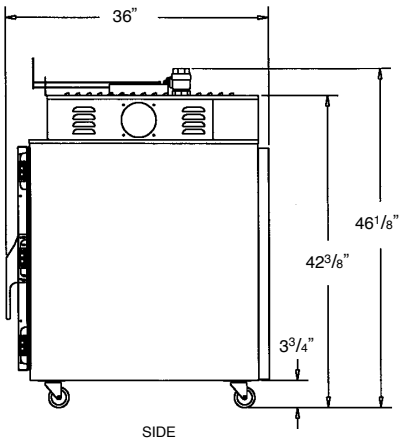

SIDE

SPECIFICATIONS:
ELECTRICAL:
208 or 240 Volt single or three phase is standard.
(Please specify at time of order.)

SERVICE CONNECTIONS:
ES-6 is shipped from factory to be hard wired on site. Single phase uses three wire system. Three phase uses four wire system.

ELECTRICAL:

Amp Draw	208/1	208/3	240/1	240/3
L1	13.5	10	12	8.5

WATER:
A 1/4" waterline is required. A water filtration system should be used to minimize mineral build-up.

LISTINGS:
The ES-6 has C-ETL-US and NSF listings.

INSTALLATION:
Allow four inches on each side and back for ventilation of unit.

CAPACITY:

	18"x26" Sheet Pans	13"x18" Sheet Pans	Spacing
Smoker	5	10	3-1/2"

5 Chrome racks
Approximately 150 pounds of product

DIMENSIONS:

	Height	Width	Depth
Exterior	48-3/8"	27-3/8"	36"
Interior	26"	18-3/4"	29"

DOOR SWING: Smoker - 27-5/8"

PACKING SIZE:
49" High, 36" Wide, 40" Deep
(1245 mm High, 915 mm Wide, 1016 mm Deep)

SHIPPING WEIGHT:
400 Pounds, FOB Menominee, MI 49858

INTENDED FOR COMMERCIAL USE ONLY. NOT FOR HOUSEHOLD USE.

Toastmaster, in line with its policy to continually improve its product, reserves the right to change materials or specifications without notice. Such revisions do not entitle the buyer to corresponding changes, improvements, additions, or replacements for previously purchased equipment.

THE MIDDLEBY CORPORATION
THE BRAND BEHIND THE BRANDS

Toastmaster® 10 Sunnen Dr. St. Louis, MO 63143• www.toastmastercorp.com
Toll Free: 1-800-264-7827 • Telephone: 1-314-781-2777 • Toll Free Fax: 1-800-264-6666 • Fax: 314-781-3636